PX4i | PX6i

High Performance Printer

User's Manual

Intermec Technologies Corporation

Worldwide Headquarters
6001 36th Ave.W.
Everett, WA 98203
U.S.A.

www.intermec.com

The information contained herein is proprietary and is provided solely for the purpose of allowing customers to operate and service Intermec-manufactured equipment and is not to be released, reproduced, or used for any other purpose without written permission of Intermec Technologies Corporation.

Information and specifications contained in this document are subject to change without prior notice and do not represent a commitment on the part of Intermec Technologies Corporation.

©200 -2014 by Intermec Technologies Corporation. All rights reserved.

The word Intermec, the Intermec logo, Norand, ArciTech, Beverage Routebook, CrossBar, dcBrowser, Duratherm, EasyADC, EasyCoder, EasySet, Fingerprint, i-gistics, INCA (under license), Intellitag, Intellitag Gen2, JANUS, LabelShop, MobileLAN, Picolink, Ready-to-Work, RoutePower, Sabre, ScanPlus, ShopScan, Smart Mobile Computing, SmartSystems, TE 2000, Trakker Antares, and Vista Powered are either trademarks or registered trademarks of Intermec Technologies Corporation.

For patent information, please refer to **www.honeywellaidc.com/patents**.

Wi-Fi is a registered certification mark of the Wi-Fi Alliance.

Microsoft, Windows, and the Windows logo are registered trademarks of Microsoft Corporation in the United States and/or other countries.

Kimdura is a registered trademark of Kimberly Clark.

Valeron is a registered trademark of Valéron Strength Films, an ITW Company.

The name Centronics is wholly owned by GENICOM Corporation.

TrueDoc is a registered trademark of Bitstream, Inc.

TrueType is a trademark of Apple Computer Inc.

Unicode is a trademark of Unicode Inc.

This product includes software developed by the OpenSSL Project for use in the OpenSSL Toolkit (www.openssl.org).

This product includes cryptographic software written by Eric Young (EAY@cryptsoft.com).

This product uses Regex++, Index software during its operational phases. The owner of Regex++ has granted use of the software to anyone provided such use is accompanied by the following copyright and permission notice:
Regex++, Index. (Version 3.31, 16th Dec 2001)
Copyright © 1998-2001 Dr John Maddock
Permission to use, copy, modify, distribute and sell this software and its documentation for any purpose is hereby granted without fee, provided that the above copyright notice appear in all copies and that both that copyright notice and this permission notice appear in supporting documentation. Dr John Maddock makes no representations about the suitability of this software for any purpose. It is provided “as is” without express or implied warranty.

Document Change Record

This page records changes to this document. The document was originally released as 1-960625-00 (Fingerprint) and 1-960625-01 (IPL).

Version Number	Date	Description of Change
003	1/2014	Updated Global Services and Support information.
002	11/2010	• Added methods to verify a USB mass storage device is supported by the printer. • Expanded the Upgrading Firmware procedure.

001	10/2009	• Combined the Fingerprint (P/N 934-039-001) and IPL (P/N 934-040-001) versions of the user's manuals.
		• Incorporated the *EasyLAN User's Guide* (P/N 1-960590-03) and the *EasyCoder Printer RFID User's Guide* (P/N 934-008-002) into this manual.
		• Removed configuration information from the *EasyLAN Ethernet Interface Kit Installation Instruction*s (P/N 1-960589-01) and the *EasyLAN Wireless Interface Kit Installation Instructions* (P/N 1-960610-04) and added it to this manual.
		• Added information to support the latest firmware release, including:
		  • USB host support
		  • 400 dpi support
		  • New keypad
		  • Ethernet interface
		  • Monotype font support
		  • Multiple network interfaces
		  • Multiple firmware support
		  • IPv6 functionality
		  • Multiple NET connections

934-039-001	06/2008	IPL: Revised to incorporate new changes and brought into FrameMaker 8.
934-040-001	06/2008	Fingerprint: Revised to incorporate new changes and brought into FrameMaker 8.
02	06/2007	IPL: Revised to support new 400 dpi printhead.

Version Number	Date	Description of Change
01	09/2004	IPL: Initial release. Supports IPL v2.30. Fingerprint: For preproduction MAT printers.
1-960625-00	05/2004	Fingerprint: For preproduction DAT printers.

Contents

Before You Begin x
Safety Information x
Global Services and Support xi
Warranty Information xi
Web Support xi
Send Feedback xi
Telephone Support xi
Who Should Read This Manual xii
Related Documents xii

1 Using the Printer 1

Learning About the Printers 2
Identifying the Parts of the Printer 2
Selecting a Printer Language 3
Understanding the Control Panel 5
Understanding the Buttons 5
Understanding the LEDs 6
Understanding the Screen 7
Understanding the Printer Sounds 7

Loading Media 7
Loading Media for Tear-Off Printing 8
Loading Media for Peel-Off Printing 15
Loading Media for Cut-Off Printing 24
Loading Media for Internal Batch Takeup Printing 32
Loading Media for Printing From an External Supply 41

Loading Ribbon 43

Printing a Test Label 51

Creating and Printing Labels 53

Printing on RFID Media 54

2 Connecting the Printer 55

Connecting the Printer to Your PC 56
Connecting the Printer to a PC Through the Serial Port 56
Connecting the Printer to a PC Through the USB Device Port 57
Connecting the Printer to a PC Through the IEEE 1284 Port 57

Connecting the Printer to Your Network 58
Setting Up Ethernet Communications 58
Manually Configuring IP Settings 60
Setting Up 802.11 Radio Communications 61
Configuring 802.11 Wireless Security Using Fingerprint 64
Configuring 802.11 Wireless Security Using IPL 67

Connecting Peripherals to the USB Host Port 70
Using a USB Mass Storage Device 71
Connecting a Keyboard to the USB Host Port 71
Connecting a Bar Code Scanner to the USB Host Port. 72
Connecting a USB Hub to the USB Host Port 72

3 Configuring the Printer 73

Configuring Your Printer 74
Configuring Your Printer From the Screen 74
Configuring Your Printer From the Printer Home Page. 76
Configuring Communications Settings 77
Configuring Media Settings 77
Configuring RFID Settings (Printer With RFID Option) 78
Configuring Print Engine Settings 79
Configuring Web Shell Settings 80
Configuring Alerts 81
Configuring General Network Settings 83
Configuring Mail Settings 85
Configuring SNMP Settings 87
Configuring TCP/IP Settings 89
Configuring the Network Type. 91
Configuring Avalanche Settings. 92
Configuring SmartSystems Settings 93
Configuring Wireless LAN Settings. 94
Configuring 802.1x Settings 96
Configuring Your Printer With PrintSet. 98
Configuring Your Printer With Commands Sent From Your PC. 98
Configuring Your Printer Using SmartSystems Foundation 99
Configuring Your Printer Using Wavelink Avalanche. 100

Choosing an Ethernet or Wireless Network 100
Choosing the Network Type From the Printer Screen 101
Choosing the Network Type Using Printer Commands 101

Upgrading Firmware 102

Downloading Fonts and Graphics 104

4 Troubleshooting and Maintaining the Printer 105

Troubleshooting the Printer 106
Contacting Product Support 106
Understanding Error Messages 107
Troubleshooting Printer Problems and Finding Solutions 111
Resetting the Printer 117

Adjusting the Printer 118
Adjusting the Pressure Arm 118
Adjusting the Label Stop Sensor 119
Adjusting the Printhead Pressure 123
Adjusting the Label Taken Sensor 124

Maintaining the Printer 125
Cleaning the Printer 125
Cleaning the Exterior of the Printer 126
Cleaning the Media Guides 126
Cleaning the Printhead 128
Replacing the Printhead 130

A Specifications 137

Specifications 138

Interfaces 140
RS-232 Serial Interface 140
USB Interface 141
USB Host Interface 142
Ethernet Interface 142
Parallel IEEE 1284 Interface 143

Media Specifications 144

Accessories for the Printer 155

B Default Settings 157

Default Configuration 158
Fingerprint Default Configuration 158
IPL Default Configuration 161

C Fingerprint and IPL Setup Menus 165

Fingerprint Setup Menus 166
Fingerprint Main Level Setup Menu 166
Fingerprint Ser-Com,UART1 Menu 166
Fingerprint Net-Com,NET1 Menu 166
Fingerprint COM Menu 167
Fingerprint Network Menu 167
Fingerprint RFID Menu 167
Fingerprint Feedadj Menu 167
Fingerprint Media Menu 168
Fingerprint Print Defs Menu 169

IPL Setup Menus 170
IPL Main Level Setup Menu 170
IPL Ser-Com Menu 170
IPL COM Menu 170
IPL Network Menu 171
IPL RFID Menu 171
IPL Test/Service Menu 171
IPL Media Menu 172
IPL Configuration Menu 172

D Advanced Configuration 173

Printer File System (Fingerprint) 174
Device Tree Structure 174
Devices and Directories 174

Customizing the Printer Home Page 176
Web Style Guide Files 177
Content of a Web Style Guide File 177
Required Environment Variables 177
Optional Environment Variables 178
x-www-url-Encoding Syntax Rules 179
Memory and Storage 180
Creating a Web Style Guide File 180

Index 181

Before You Begin

This section provides you with safety information, technical support information, and sources for additional product information.

Safety Information

Your safety is extremely important. Read and follow all warnings and cautions in this document before handling and operating Intermec equipment. You can be seriously injured, and equipment and data can be damaged if you do not follow the safety warnings and cautions.

This section explains how to identify and understand warnings, cautions, and notes that are in this document.

A warning alerts you of an operating procedure, practice, condition, or statement that must be strictly observed to avoid death or serious injury to the persons working on the equipment.

A caution alerts you to an operating procedure, practice, condition, or statement that must be strictly observed to prevent equipment damage or destruction, or corruption or loss of data.

Note: Notes either provide extra information about a topic or contain special instructions for handling a particular condition or set of circumstances.

This icon appears at the beginning of any procedure in this manual that could cause you to touch components (such as printed circuit boards) that are susceptible to damage from electrostatic discharge (ESD). When you see this icon, you must follow standard ESD guidelines to avoid damaging the equipment you are servicing.

Global Services and Support

Warranty Information

To understand the warranty for your Intermec product, visit the Intermec website at **www.intermec.com** and click **Support** > **Returns and Repairs** > **Warranty**.

Disclaimer of warranties: The sample code included in this document is presented for reference only. The code does not necessarily represent complete, tested programs. The code is provided "as is with all faults." All warranties are expressly disclaimed, including the implied warranties of merchantability and fitness for a particular purpose.

Web Support

Visit the Intermec website at **www.intermec.com** to download our current manuals.

Visit the Intermec technical knowledge base (Knowledge Central) at **www.intermec.com** and click **Support** > **Knowledge Central** to review technical information or to request technical support for your Intermec product.

Send Feedback

Your feedback is crucial to the continual improvement of our documentation. To provide feedback about this manual, please contact the Intermec Technical Communications department directly at **TechnicalCommunications@intermec.com**.

Telephone Support

In the U.S.A. and Canada, call **1-800-755-5505**.

Outside the U.S.A. and Canada, contact your local Intermec representative. To search for your local representative, from the Intermec website, click **About Us** > **Contact Us**.

Who Should Read This Manual

This manual is for the person who is responsible for installing, configuring, and maintaining the PX4i or PX6i.

This manual provides you with information about the features of the PX4i and PX6i, and how to install, configure, operate, maintain, and troubleshoot them.

Before you work with the PX4i or PX6i, you should be familiar with your network and general networking terms, such as IP address.

Related Documents

Here are some related Intermec documents you might find useful:

- *Intermec Fingerprint Developer's Guide*
- *Intermec Fingerprint Command Reference Manual*
- *Intermec Printer Language (IPL) Developer's Guide*
- *Intermec Printer Language (IPL) Command Reference Manual*
- *DSim Programmer's Guide*
- *ZSim Programmer's Guide*

The Intermec website at **www.intermec.com** contains our documents that you can download for free.

To download documents

1. Visit the Intermec website at **www.intermec.com**.
2. Click the **Products** tab.
3. Using the **Products** menu, navigate to your product page. For example, to find the PX4i printer product page, click **Printers and Media** > **Industrial Printers** > **PX4i**.
4. Click the **Manuals** tab.
5. If your product does not have its own product page, click **Support** > **Manuals**. Use the **Product Category** field, the **Product Family** field, and the **Product** field to help you locate the documentation for your product.

1
Using the Printer

Use this chapter to familiarize yourself with the PX4i and PX6i printers. This chapter contains these sections:

- **Learning About the Printers**
- **Loading Media**
- **Loading Ribbon**
- **Printing a Test Label**
- **Creating and Printing Labels**
- **Printing on RFID Media**

Learning About the Printers

The PX4i and PX6i High Performance printers are rugged, high-volume, thermal transfer printers. With sturdy, all-metal construction, these printers are designed to excel at 24/7 printing in harsh industrial environments and easily adapt to changes in host environments or applications.

The PX4i and PX6i support a maximum print width of four or six inches, respectively. Throughout this manual, both models of the printer are referred to as "printer" unless otherwise noted.

Identifying the Parts of the Printer

Use this section to familiarize yourself with the parts of the printers.

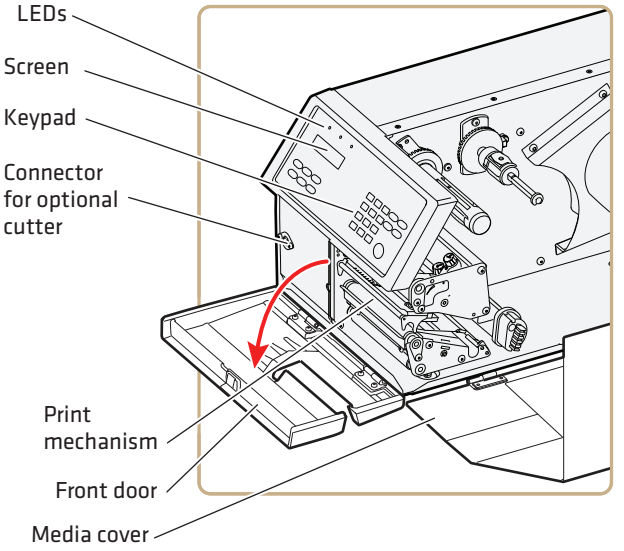

Front View

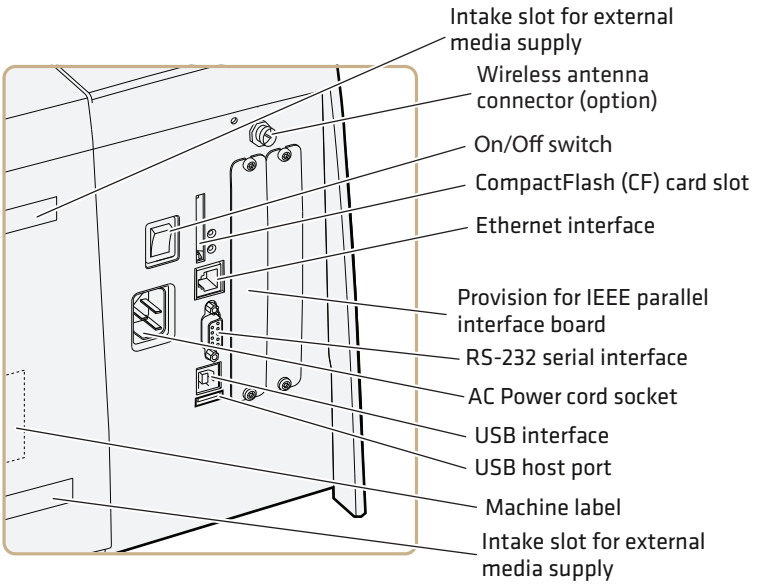

Back View

Selecting a Printer Language

Your printer comes loaded with different printer command languages. The first time you start your printer, you are prompted to select the command language. The printer language you choose affects the functionality of the printer and how you interact with it.

Printer Command Language Descriptions

Printer Language	Description
Fingerprint	Intermec Fingerprint is a BASIC-inspired programming language you use to design label formats and write custom printer application software.
Intermec Printer Language (IPL)	IPL is an easy-to-use programming language that lets you design, download, and modify formats.
ZSim	ZSim is a Zebra™ interpreter program that interprets ZPL II or later programs. To setup, configure, and use ZSim, see the ***ZSim Programmer's Guide***.

Printer Command Language Descriptions (continued)

Printer Language	Description
DSim	DSim is a Datamax™ simulation program that runs Datamax programs. To setup, configure, and use DSim, see the ***DSim Programmer's Guide***.

To select your printer language

- Press the key that corresponds to the printer language you want to run on your printer.

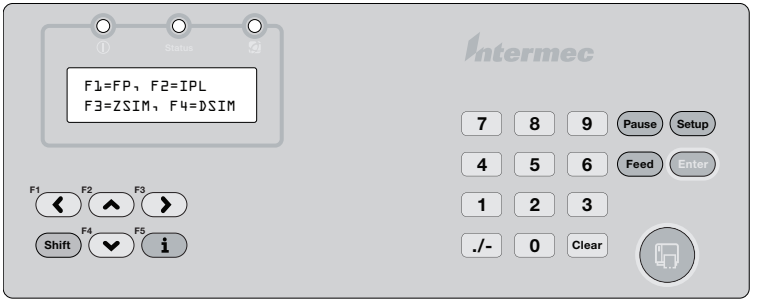

Printer Startup Screen: *This screen appears the first time you turn on your printer.*

The language you select automatically runs each time you turn on your printer.

Once your printer is running a particular printer language, you can change the printer language from the Setup menu. The way that you access the command language menu depends on which language you are currently running.

Changing the Printer Language From the Setup Menu

Language	How to Access the Command Language Menu
IPL	• Go to **SETUP** > **TEST/SERVICE** > **CMD LANGUAGE**.
Fingerprint or Direct Protocol	• Go to **SETUP** > **PRINT DEFS** > **CMD LANGUAGE**.

Changing the Printer Language From the Setup Menu (continued)

Language	How to Access the Command Language Menu
ZSim or DSim	**1** Press Setup. **2** Enter the Fingerprint password: 8311. **3** Press Enter. **4** Go to **SETUP** > **PRINT DEFS** > **CMD LANGUAGE**.

Understanding the Control Panel

The control panel provides buttons, LEDs, and a liquid crystal display (LCD) for you to interact with the printer.

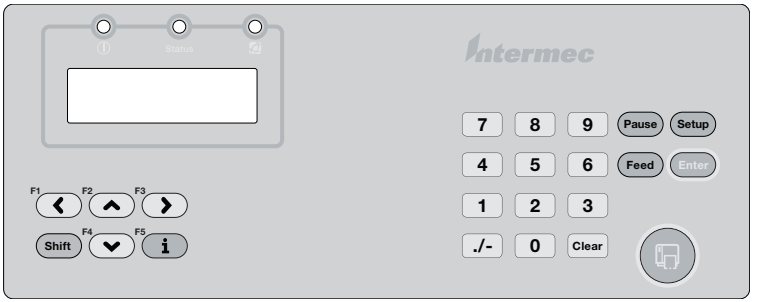

Control Panel: *Use this illustration to familiarize yourself with the buttons and lights on the printer.*

Understanding the Buttons

Use the buttons and button combinations to perform functions on the printer. If you are using Fingerprint applications, you can assign custom functions to each button or disable individual buttons. For help, see the *Intermec Fingerprint Developer's Guide*.

Understanding the Function Buttons

Button Name	Button	Description
Print		Feeds or pauses a print job. Reprints the last printed label
Pause	Pause	Pauses and resumes printing.
Pause + Shift	Pause + Shift	Stops a Fingerprint application.
Setup	Enter	Enters Setup mode.
Feed	Feed	Feeds a blank label or other media type.

Understanding the Function Buttons (continued)

Button Name	Button	Description
Feed + Shift	Feed + Shift	Performs a Testfeed (feeds a blank label and adjusts the media feed).
i	i	Displays error messages, Ready-to-Work status, and communication channel information.
< >	< or >	After you press i, use these buttons to scroll through error and information messages.

Understanding the LEDs

The printer has three LEDs: Power, Status, and the Intermec Ready-to-Work® indicator.

Understanding the LEDs

LED	State	Description
Power	Solid green	Power is on.
Status	Solid green	The printer is ready.
	Blinking green	The printer is communicating.
	Solid red	There is a printer error. For more information, see **"Troubleshooting the Printer" on page 106**.
Intermec Ready-to-Work Indicator	Off	The Intermec Ready-to-Work Indicator is off when the printer: • is in Setup mode (you pressed Setup on the keypad). • is in Information mode (you pressed i on the keypad). • firmware is being upgraded.
	Solid blue	The printer is powered on and operating.
	Blinking blue	A blinking light indicates one of these conditions: • The printer is initializing. • The printer is waiting for external resources. • There is a printer error that requires you to perform an action. For more information, see **"Troubleshooting the Printer" on page 106**.

Understanding the Screen

The screen provides background illumination and displays two lines of text, each with 16 characters. The screen displays error messages, as well as useful information when you start, setup, and upgrade your printer.

The Intermec Fingerprint programming language and Intermec Direct Protocol allow custom-made messages to be composed and displayed according to the requirements of the application.

Understanding the Printer Sounds

The printer plays sounds in response to certain actions. The sounds that are played depend on which version of firmware you are running:

- If you are running IPL:
  - the printer beeps when you press a button.
  - the printer beeps continuously if the printer is out of media or ribbon.
  - you can use an IPL command to create an audio alarm. For help, see the ***Intermec Printer Language (IPL) Developer's Guide***.
- If you are running Fingerprint:
  - the printer beeps when you press a button. You can also use a Fingerprint command to turn off this beep.
  - the printer beeps when an error occurs.
  - you can use Fingerprint commands to specify the frequency and duration of beeps for different conditions or even make the printer play simple melodies. For help, see the ***Intermec Fingerprint Developer's Guide***.

Loading Media

The PX4i and PX6i can print on labels, tickets, tags, and continuous stock in various forms. The method you use to load media depends on how you want the printer to operate. The PX4i and PX6i can print in these modes:

- Tear-off (straight-through)

- Peel-off (self-strip)
- Cut-off
- Batch take-up
- External supply
- RFID

If you are using Fingerprint, use the Feed key to load the same type of media. If you change the media type, or if the printer does not feed the media properly, simultaneously press the Shift and Feed keys to perform a "testfeed."

If you are using IPL, save the label with the sensitivity number attached to the media roll. You need this number to set the media sensitivity.

Loading Media for Tear-Off Printing

In tear-off, or straight-through, printing mode, you manually tear off the media against the printer's tear bar. In tear-off mode, use these types of media:

- Non-adhesive continuous stock
- Self-adhesive continuous stock with liner
- Self-adhesive labels with liner
- Tickets with gaps (gap stock), with or without perforations
- Tickets with black marks (mark stock), with or without perforations

You can also install an optional label taken sensor so that the next copy in the batch is not printed until the current copy is removed. For more information, see **"Accessories for the Printer" on page 155**.

If you are running Fingerprint, use the Feed key to load the same type of media. If you switch to a new type of media, or if the printer does not feed out the media properly, simultaneously press the Shift and Feed keys to perform a "testfeed."

If you are running IPL, save the label indicating the sensitivity number attached to the media roll. You need this number to set the media sensitivity.

To load media for tear-off printing

1. Turn off the printer.
2. Open the front door and media cover.

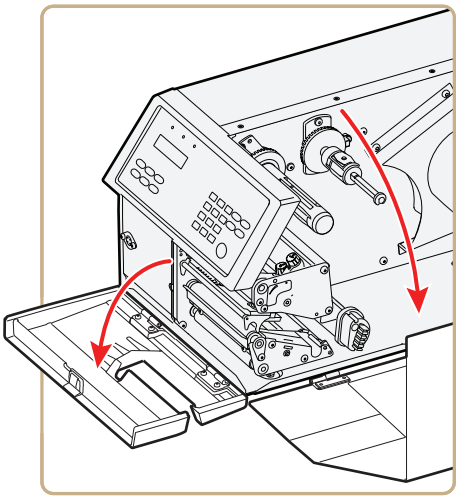

3. (PX6i only) Pull the locking handle down.

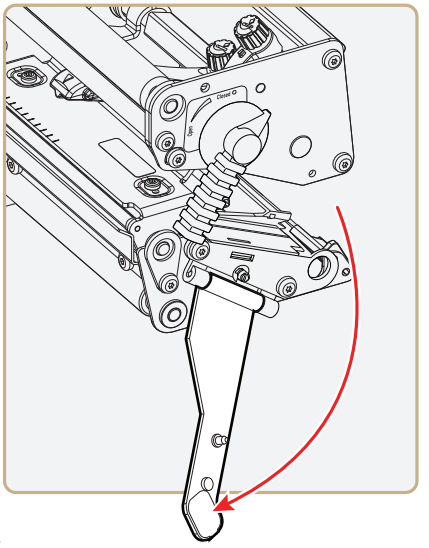

4 Raise the printhead by turning the printhead lift lever counter-clockwise.

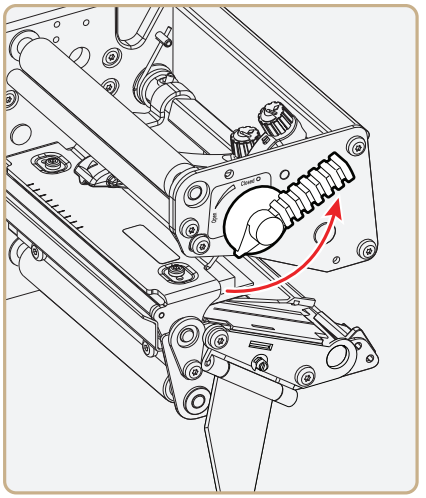

5 If necessary, remove the empty core from the media supply roll post.

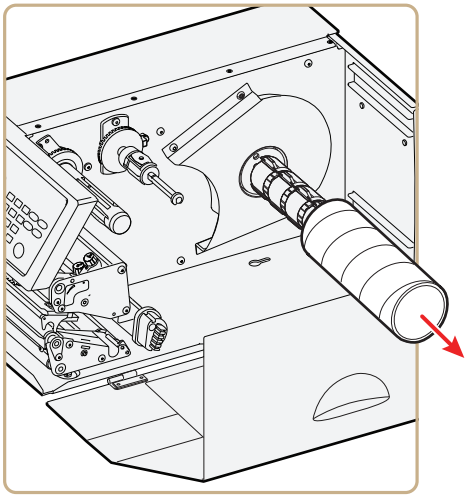

6 If you are using a media roll with a 76 mm (3 in) core, install a 3-inch adapter on the media supply hub.

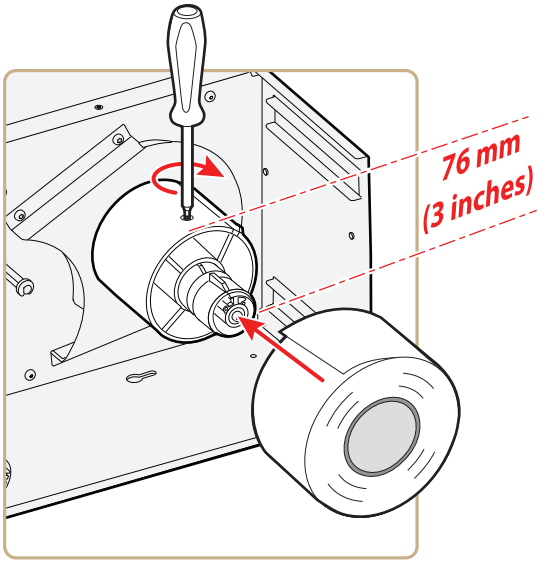

7 Fit a new roll of media on the supply post and push the roll in as far as it will go.

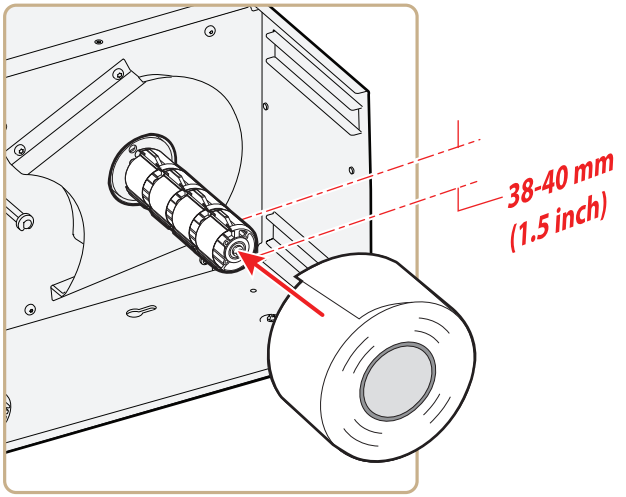

8 Route the media under the slack absorber and forward toward the print mechanism. The slack absorber can be routed for better access and then snap-locked in open position.

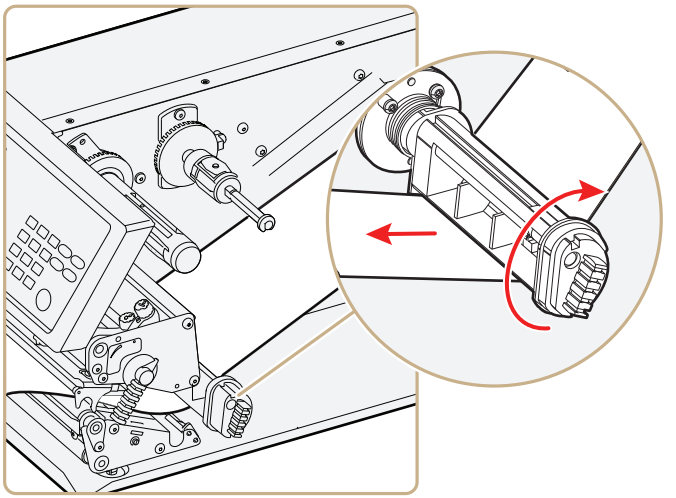

9 Route the media through the print unit and push it in as far as it will go.

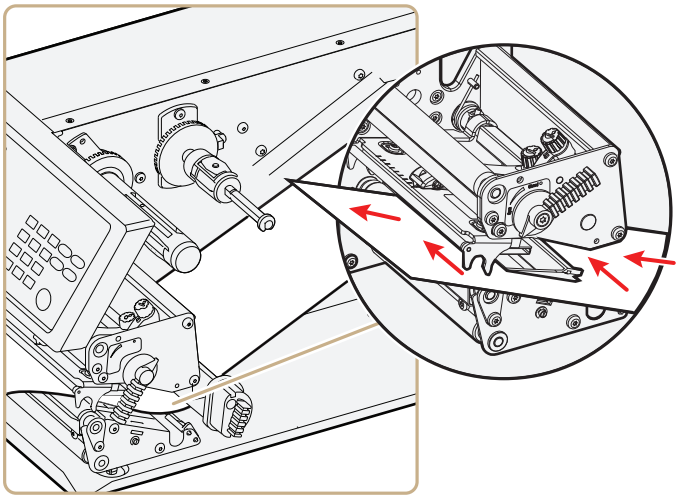

Route the Media

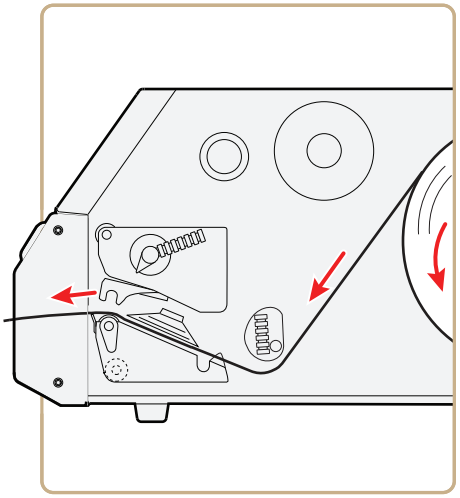

Media Path

10 Lower the printhead by turning the printhead lift lever clockwise.

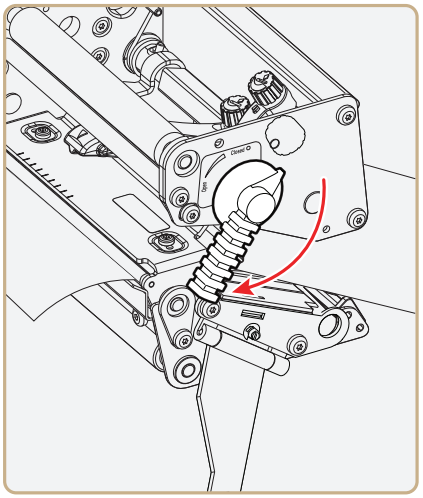

11 (PX6i only) Push the locking handle up.

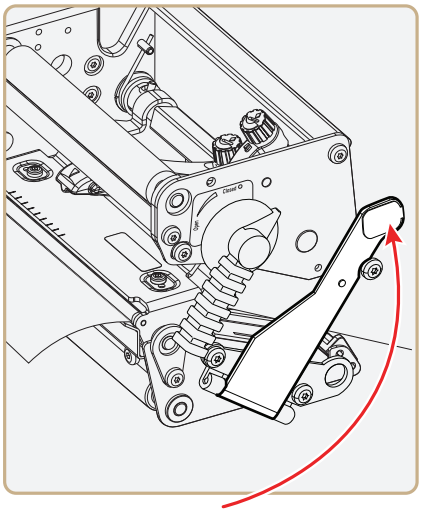

12 Adjust the position of the green edge guides so that the media is guided with a minimum of play.

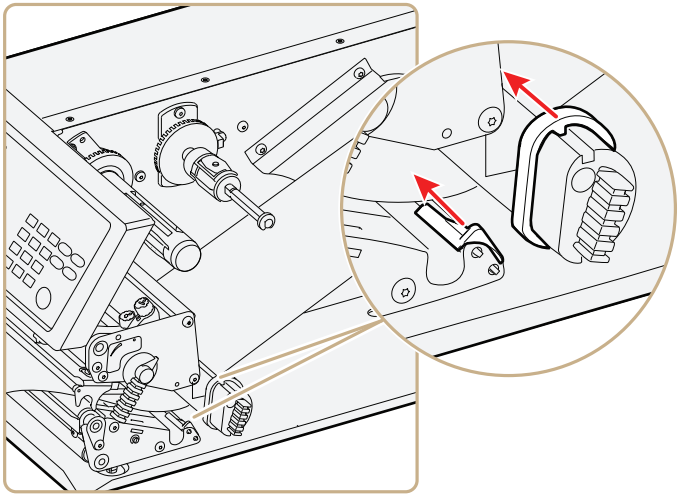

13 Close the front door and media cover. Make sure that the media runs through the slot in the front door.

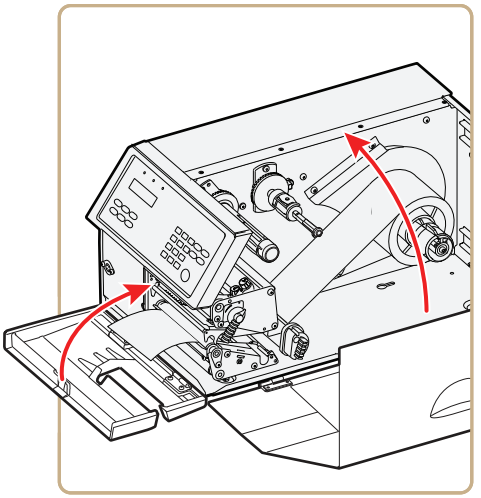

14 Press Feed to advance the media and adjust the media feed. Tear off the media by grabbing the outer edge and pulling it downwards.

Loading Media for Peel-Off Printing

In peel-off, or self-strip mode, self-adhesive labels are separated from the liner immediately after printing. Peel-off printing:

- can only be used for self-adhesive labels with liner.
- requires the optional peel-off assembly.
- cannot be performed with the optional fanfold guide installed.
- sets high demands on the media, such as label stiffness, release characteristics of the adhesive and liner, and resistance against electrostatic charging. Consult your media supplier or test the media to make sure that it is suitable for your application.
- may limit registration performance when printing on labels that have a label length of less than 25 mm (1 in).

You can also install an optional label taken sensor so that the next copy in the batch is not printed until the current copy is removed. For more information, see **"Accessories for the Printer" on page 155**.

To load media for peel-off printing

1. Turn off the printer.
2. Open the front door and media cover.

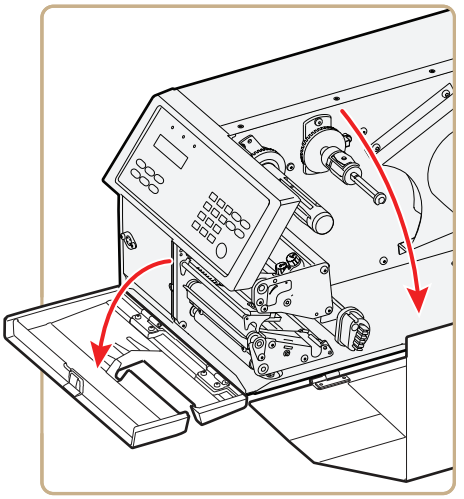

3. (PX6i only) Pull the locking handle down.

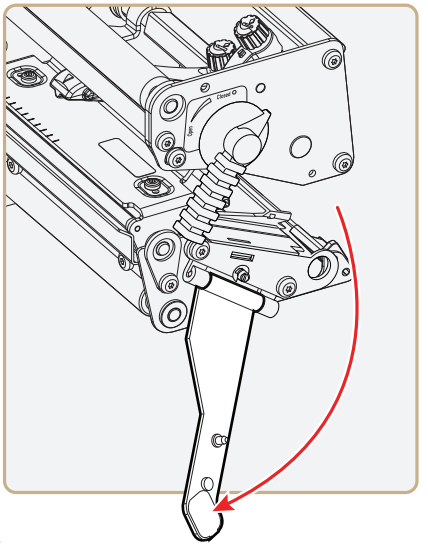

4 Raise the printhead by turning the printhead lift lever counter-clockwise.

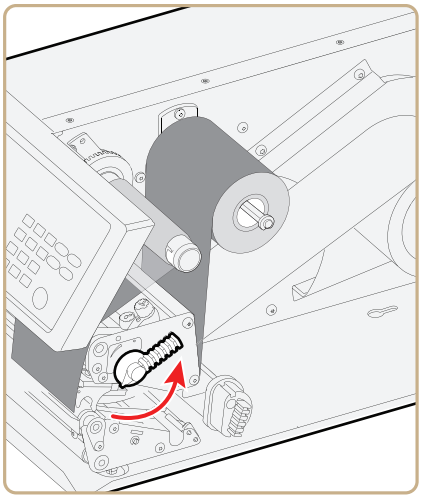

5 Pull out the green clip on the liner takeup hub and dispose of any wound-up liner.

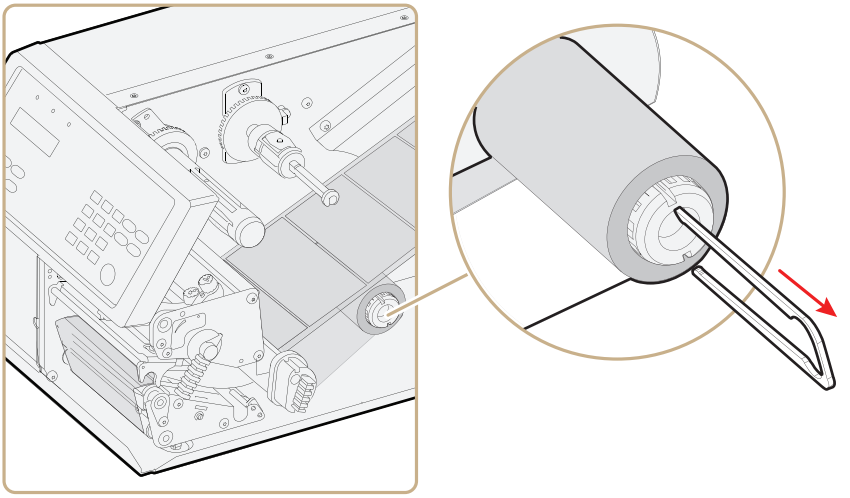

6 Remove any empty core from the media supply hub.

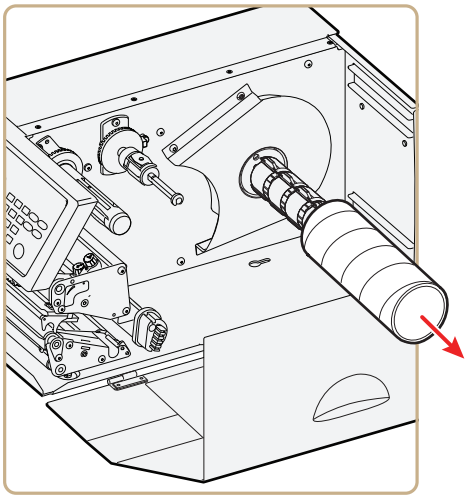

7 If your are using a media roll with a 76 mm (3 in) core, fit an adapter on the media supply hub.

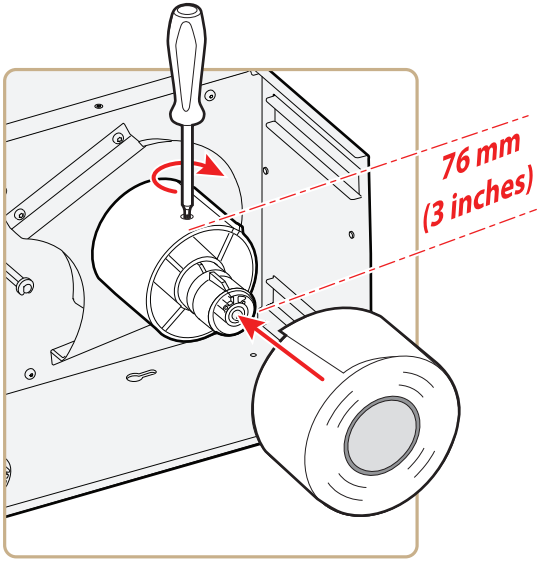

8 Fit a new roll of media onto the media supply hub and push the roll in as far as it will go.

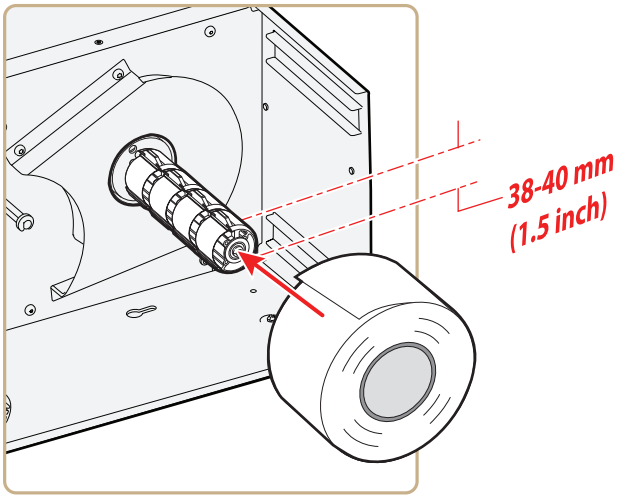

9 Route the media under the slack absorber and forward toward the print mechanism. The slack absorber can be rotated for better access and then snap-locked in open position.

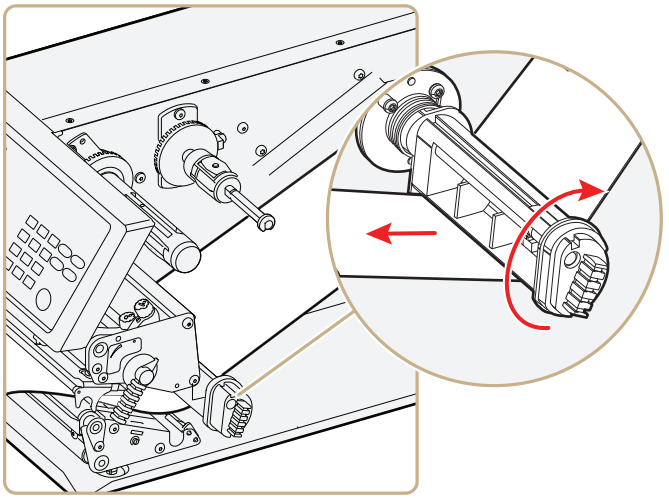

10 Route the media through the print unit and push it in as far as it will go.

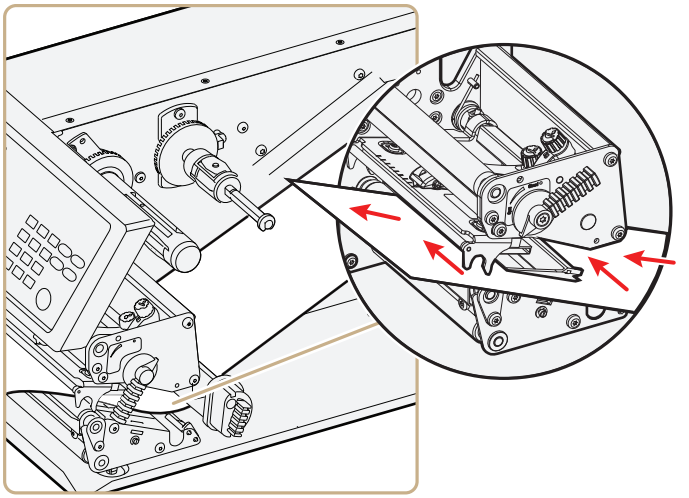

11 Pull out approximately 40 cm (15 in) of labels and remove the labels from the liner.

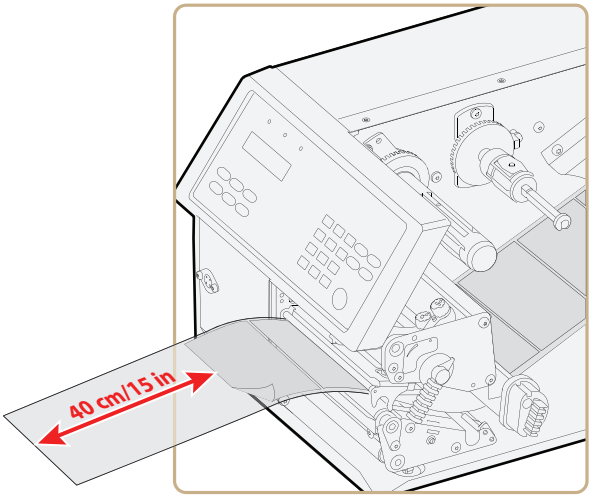

12 Route the liner around the tear bar and back under the print unit.

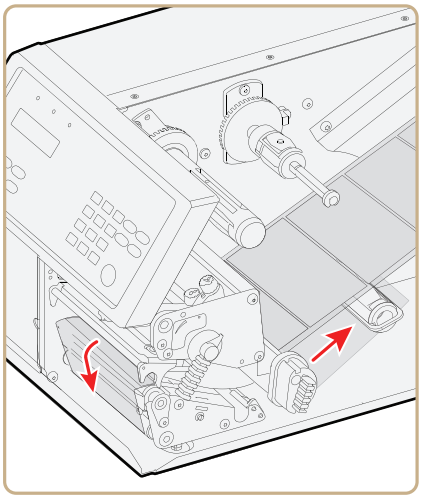

13 Secure the liner to the takeup hub with the green clip and rotate the hub until the media is pulled tight.

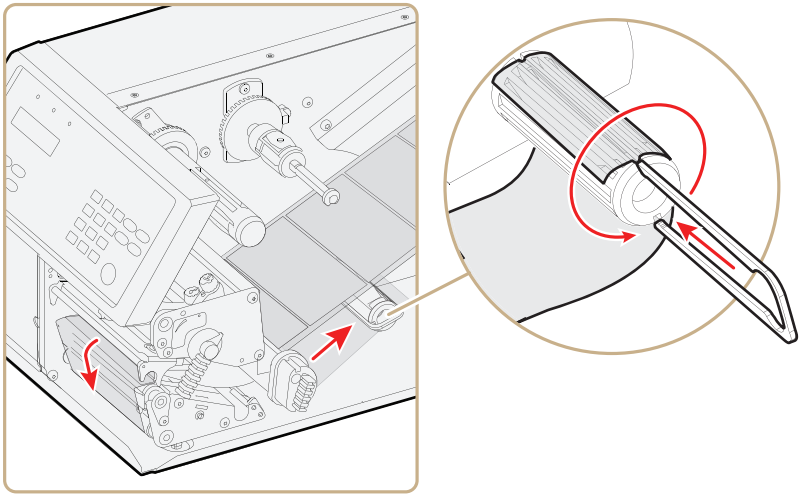

Secure the Liner

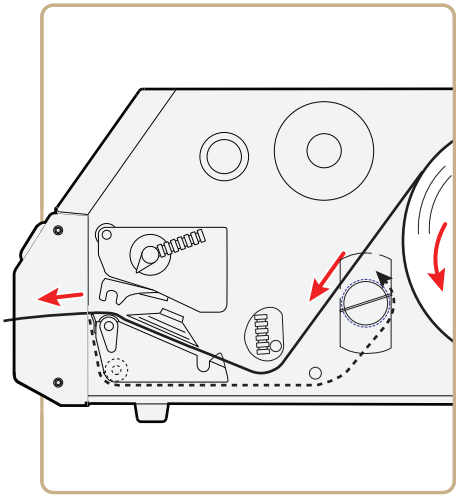

Media Path

14 Turn the printhead lift lever clockwise to lower the printhead.

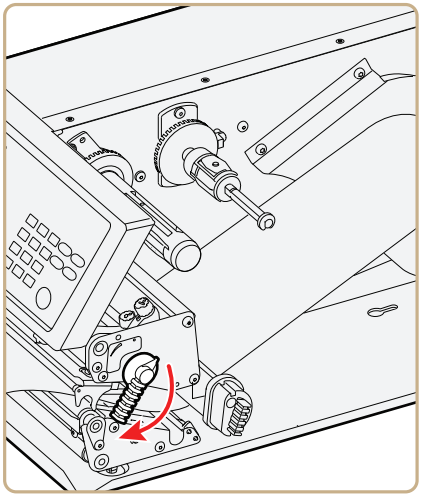

15 (PX6i only) Push the locking handle up.

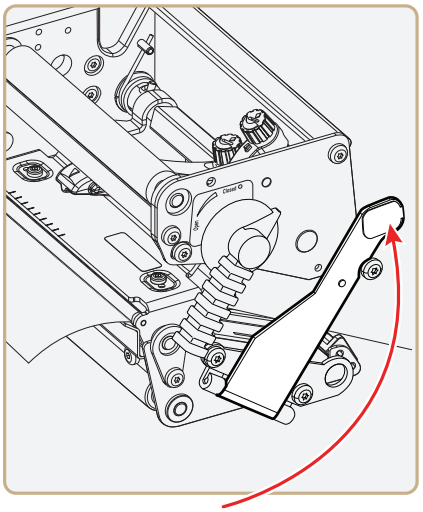

16 Adjust the position of the green edge guides so that the media is guided with a minimum of play.

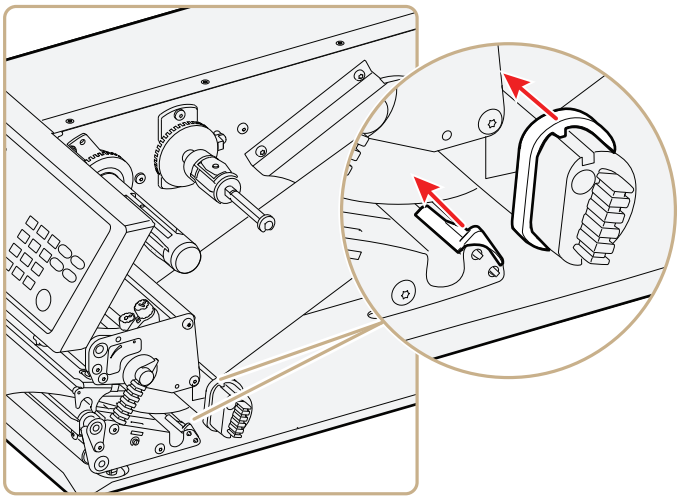

17 Close the front door and media cover.

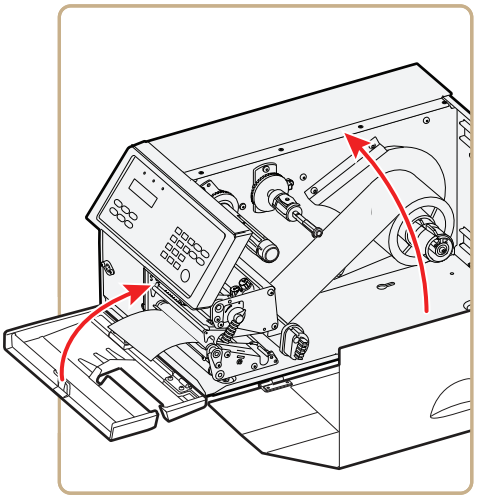

18 Press Feed to advance the media and adjust the media feed.

Loading Media for Cut-Off Printing

You can install the automatic paper cutter option to cut off the media. Cut-off printing can be used for non-adhesive continuous stock and self-adhesive labels with liner (cut only liner between labels). The cutter option:

- is designed for paper-based media with a thickness between 60 and 175 µm, roughly corresponding to a paper weight of 60 to 175 grams/m2 (basis weight 40 to 120 lb).
- cuts through the media approximately 37 mm (1.5 in) in front of the printer's dot line. Make sure to properly adjust the media feed. For help, see **"Configuring Your Printer" on page 74**.
- should not be used to cut through labels, because the adhesive sticks to the shears, which can damage the cutter. If you do cut through adhesive labels, tilt the cutter down and clean it with isopropyl alcohol.
- must be enabled in Setup mode. For help, see **"Configuring Your Printer From the Screen" on page 74**.
- is held by a latch inside the media compartment and can be tilted forward to facilitate loading media.

- has a switch that prevents it from operating when it is in the open position.
- can be fitted with an optional tray for collecting cutoff labels.
- requires the front door to be removed.

You can also install an optional label taken sensor so that the next copy in the batch is not printed until the current copy is removed. For more information, see **"Accessories for the Printer" on page 155**.

Warning

Warning: The cutting edge rotates when you turn on the power and reboot the printer. Always keep the cutter in the closed position during operation. Turn off the power or disconnect the cutter before cleaning. Keep your fingers away from cutting edges.

To load media for cut-off printing

1. Turn off the printer.
2. Open the cutter and media cover.

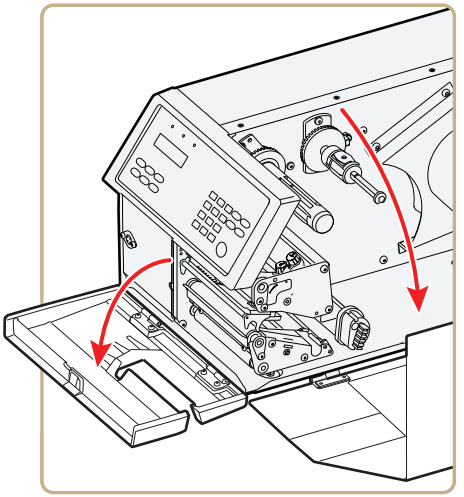

3 (PX6i only) Pull the locking handle down.

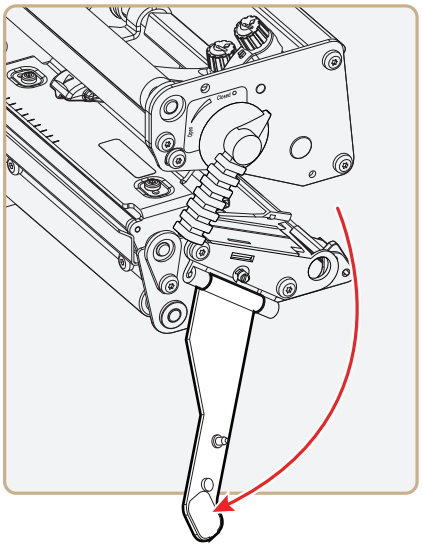

4 Turn the printhead lift lever counter-clockwise to raise the printhead.

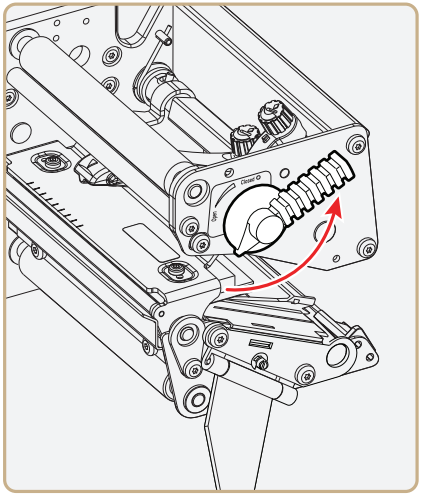

5 Remove any empty core from the media supply hub.

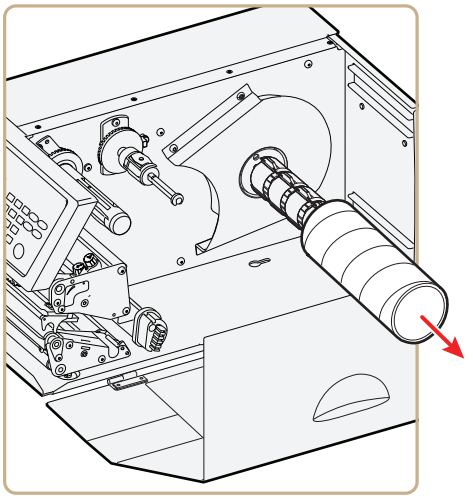

6 If your are using a media roll with a 76 mm (3 in) core, fit an adapter on the media supply hub.

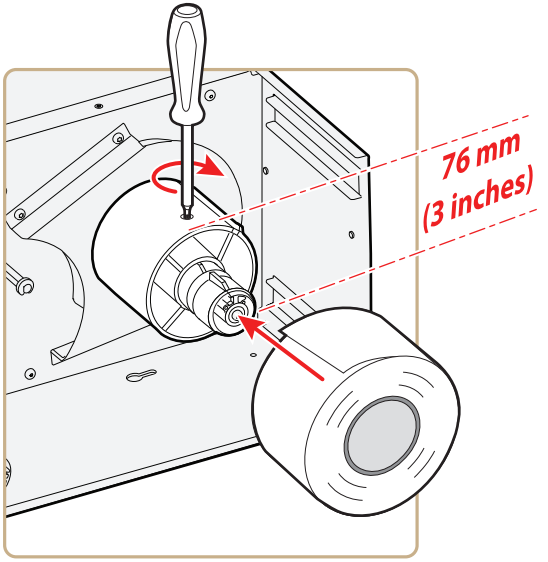

7 Fit a new roll of media onto the media supply hub and push the roll in as far as it will go.

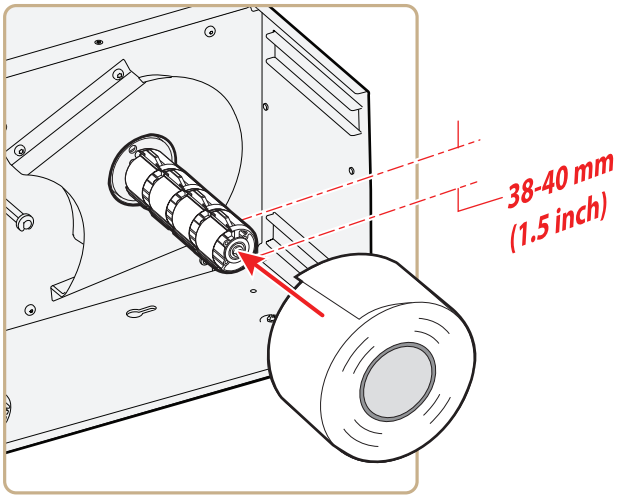

8 Route the media under the slack absorber and forward toward the print mechanism. The slack absorber can be rotated for better access and then snap-locked in open position.

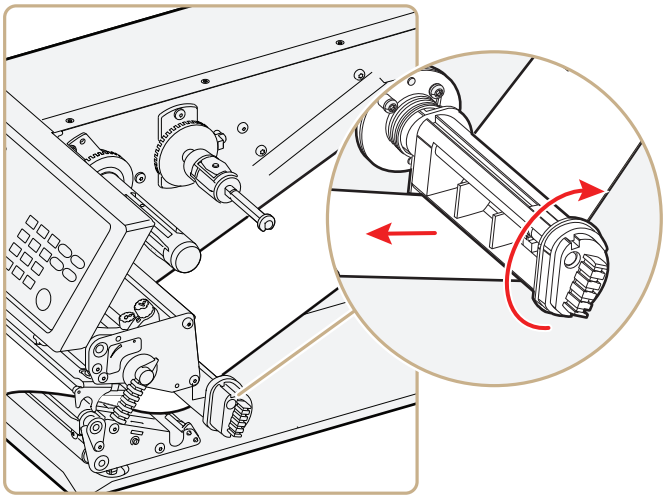

9 Route the media through the print unit and push it in as far as it will go.

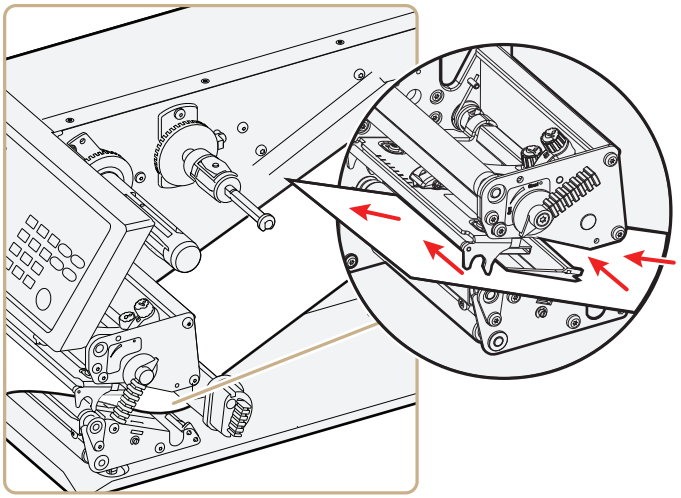

Route the Media

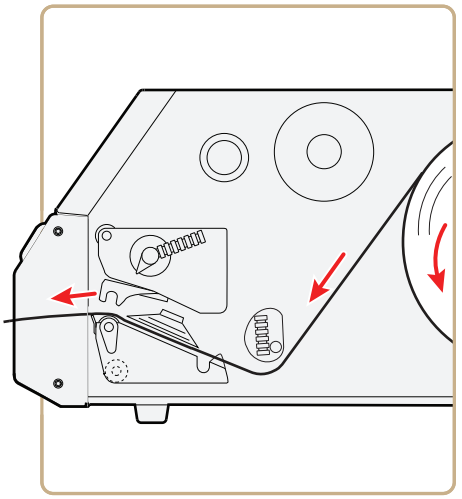

Media Path

10 Turn the printhead lift lever clockwise to lower the printhead.

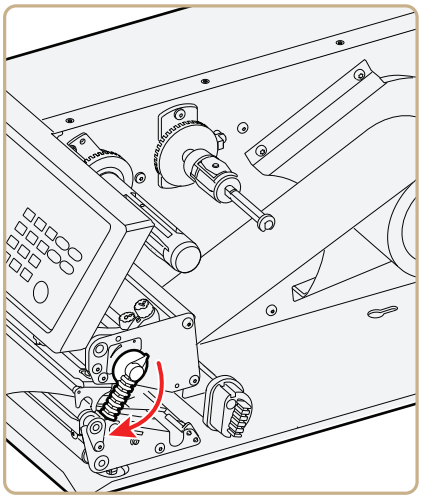

11 (PX6i only) Push the locking handle up.

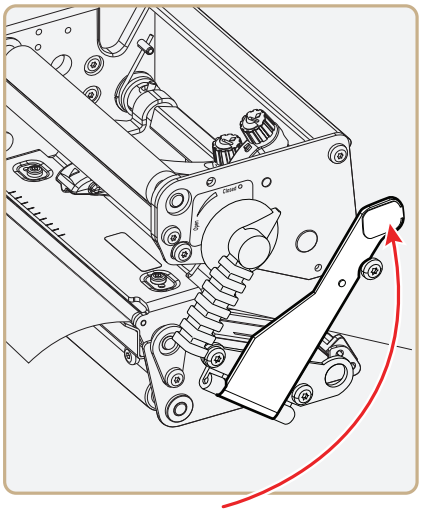

12 Adjust the position of the green edge guides so that the media is guided with a minimum of play.

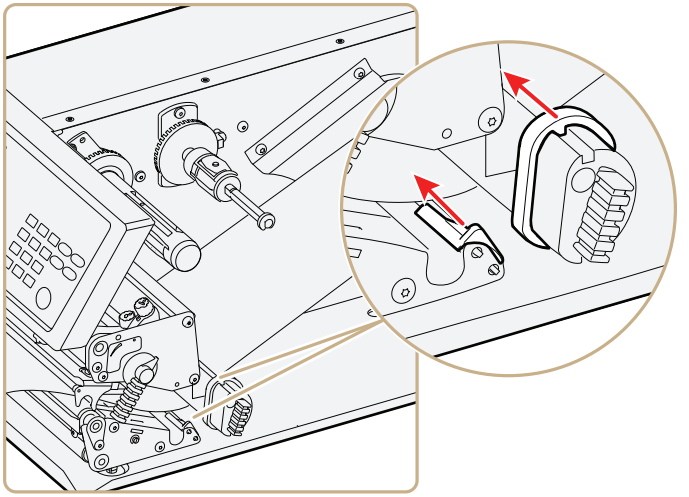

13 Route the media through the cutter between the two guide plates.

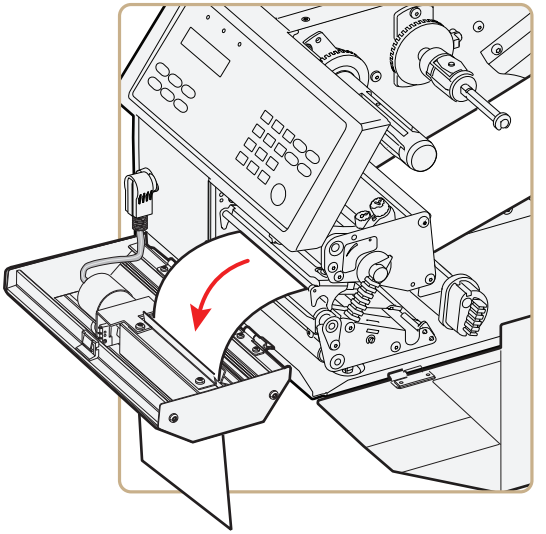

14 Close the cutter while pulling on the end of the media.

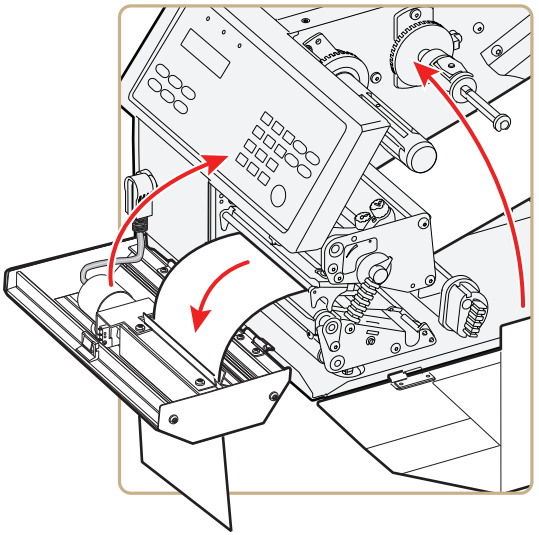

15 Close the media cover and then turn on the power.

16 Press Feed to advance the media and adjust the media feed.

Loading Media for Internal Batch Takeup Printing

In batch takeup mode, printed labels fitted on liner (backing paper) or pre-perforated tickets and tags are wound up inside the printer. The roll of printed labels, tickets, or tags can then be removed.

Batch takeup printing requires the optional factory-installed internal liner/batch takeup accessory. The takeup hub can accommodate 30 to 40% of a full-size media roll.

Internal batch takeup can be used for these types of media:

- Self-adhesive labels fitted on liner
- Pre-perforated tickets with gaps
- Pre-perforated tickets with marks

To load media for internal batch takeup printing

1. Turn off the printer.
2. Open the front door and media cover.

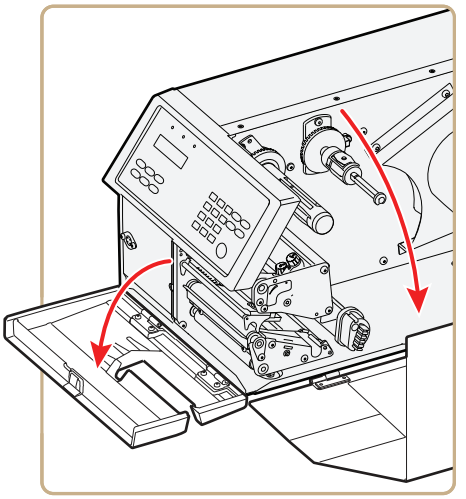

3. Turn the printhead lift lever counter-clockwise to raise the printhead.

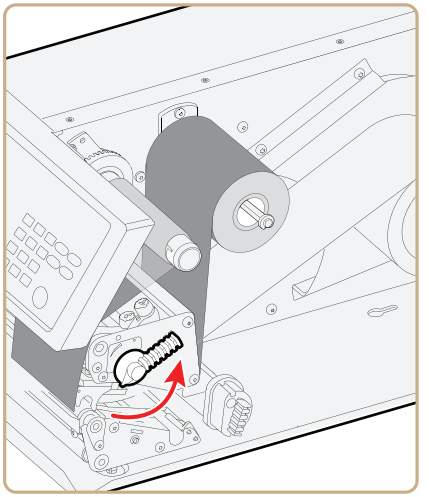

4 Remove any empty core from the media supply hub.

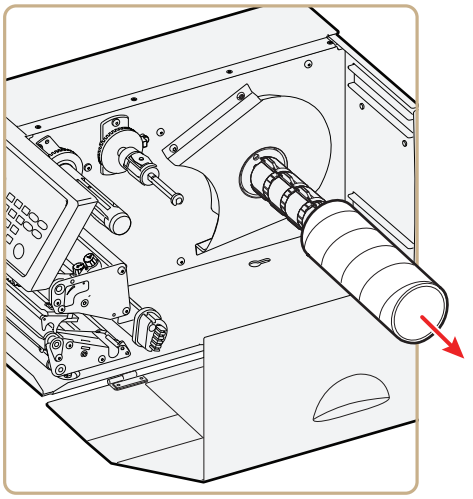

5 Loosen the single screw that holds the guide plate at the rear of the media compartment.

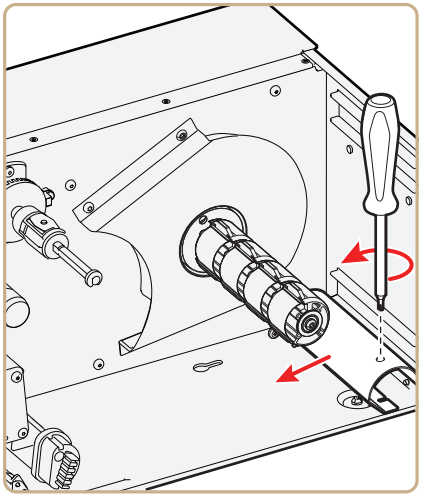

6 Remove the tear bar from the print unit and replace it with the guide plate.

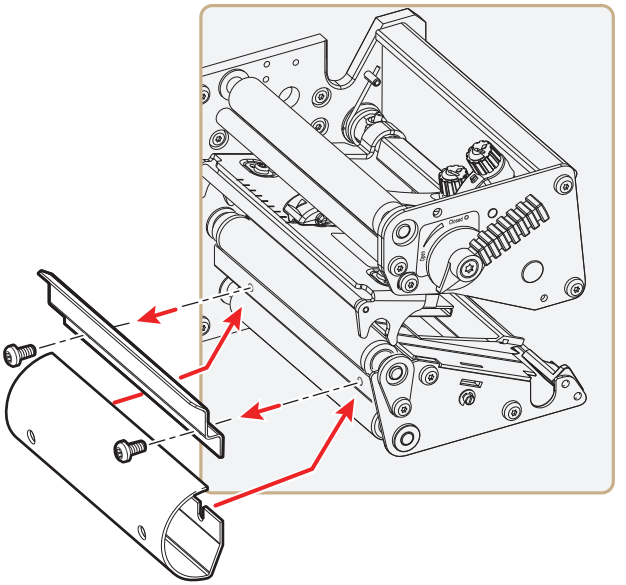

7 If you are using a media roll with a 76 mm (3 in) core, fit an adapter on the media supply hub.

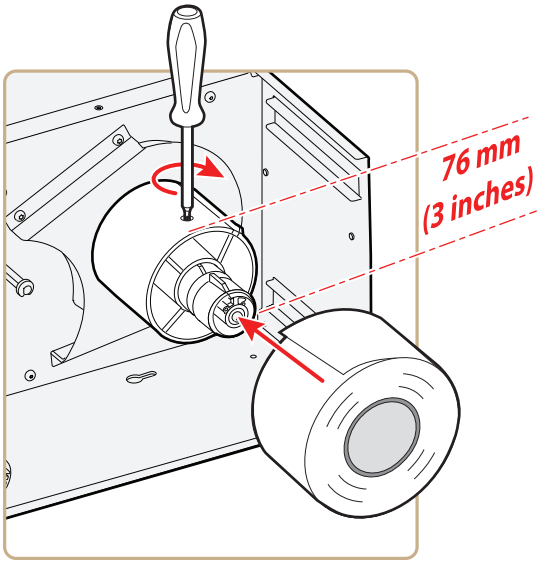

8 Fit a new roll of media onto the media supply hub and push the roll in as far as it will go.

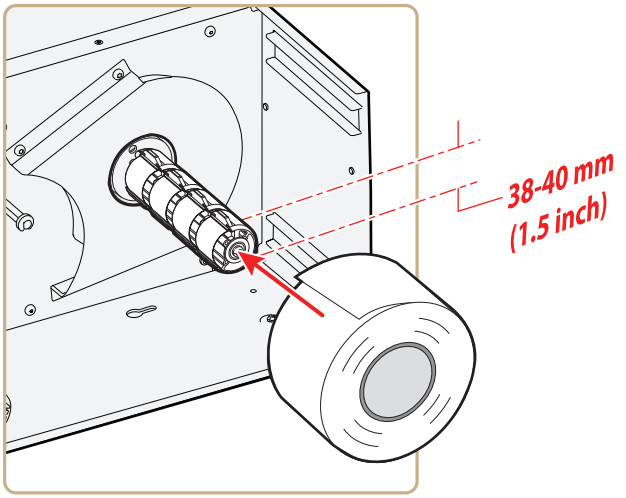

9 Route the media under the slack absorber and forward toward the print mechanism. The slack absorber can be rotated for better access and then snap-locked in open position.

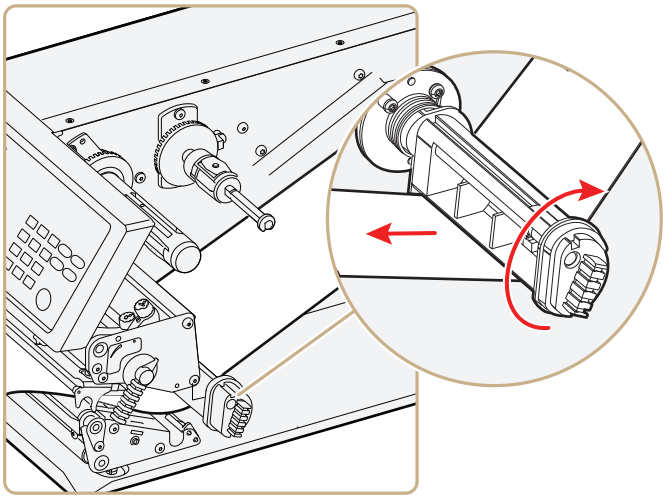

10 Route the media through the print unit and push it in as far as it will go.

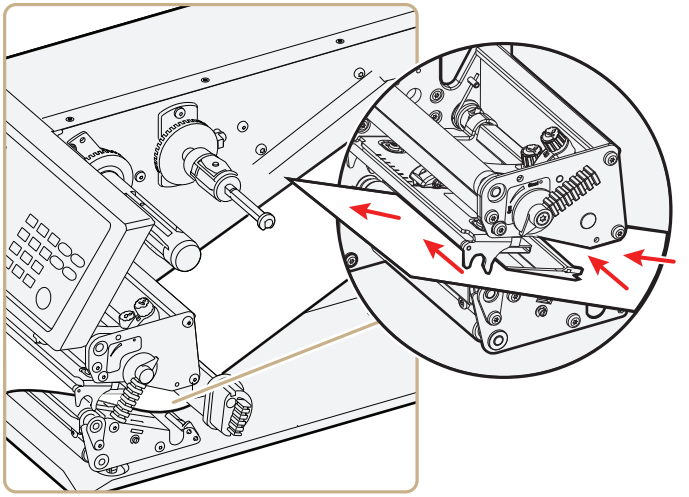

11 Pull out approximately 40 cm (15 in) of labels.

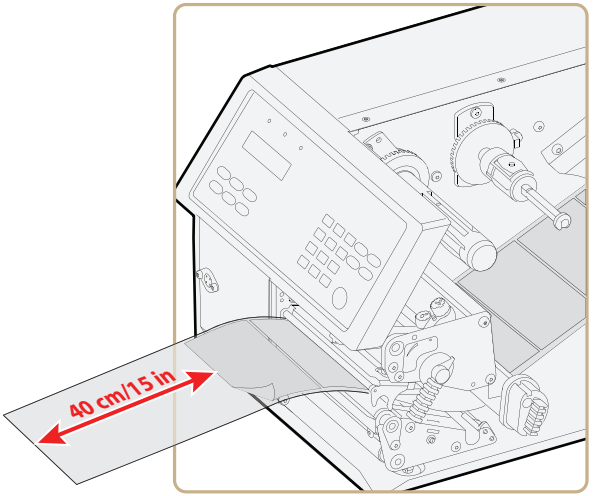

12 Route the labels around the guide plate and back under the print unit to the takeup hub.

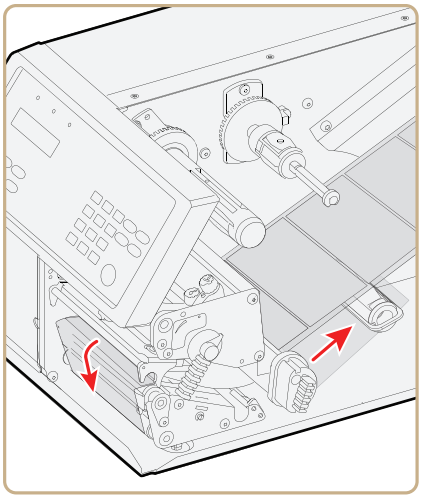

13 Wind up some of the media on the takeup hub and secure it with the green clip.

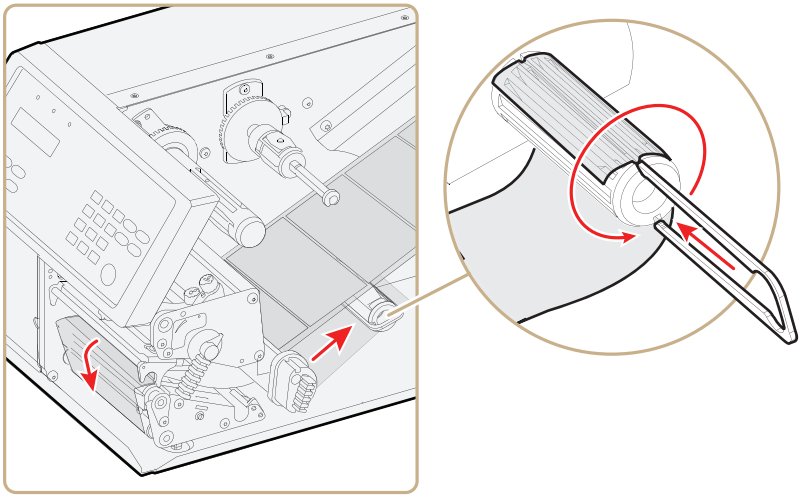

Winding and Securing the Media

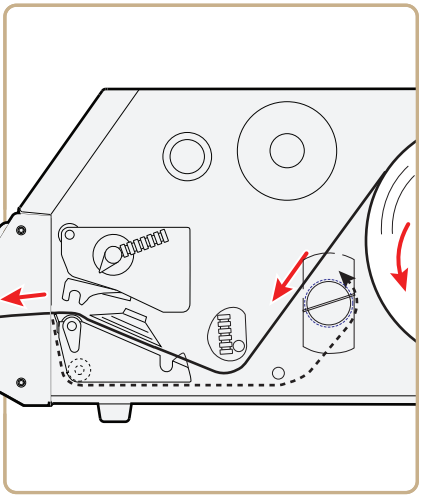

Media Path

14 Turn the printhead lift lever clockwise to lower the printhead.

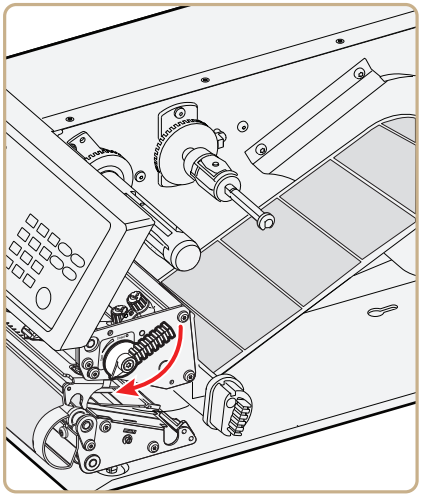

15 Adjust the position of the green edge guides so that the media is guided with a minimum of play.

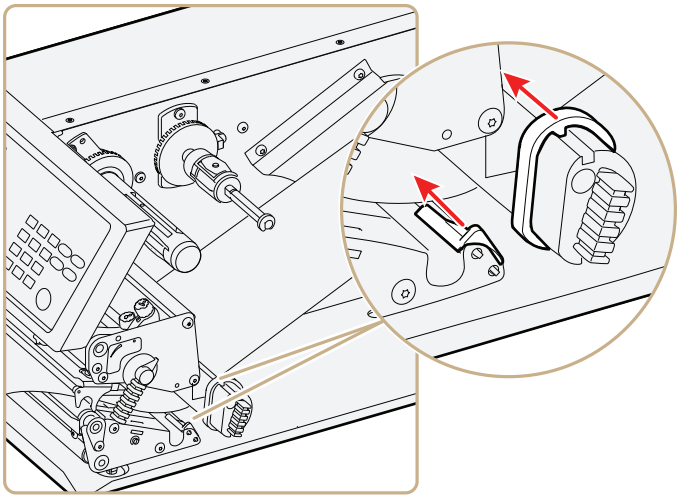

16 Close the media cover, but keep the front door open.

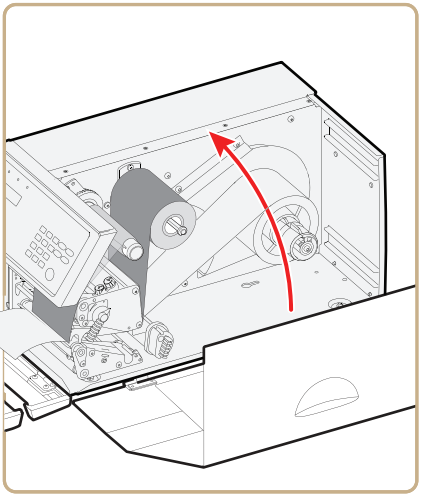

17 Press Feed to advance the media and adjust the media feed.

Loading Media for Printing From an External Supply

You can place the media supply, such as fanfold tickets or tags, behind the printer. The external supply can be used with these printing methods:

- Tear-off (straight-through)
- Cut-off
- Peel-off (upper slot only)
- Internal batch takeup

Intermec strongly recommends using the fanfold guide accessory. This guide makes loading media easier and accurately guides the media. The fanfold guide can be adjusted for various media widths down to 40 mm (1.57 in).

Note: Make sure to protect the media from dust, dirt, or other foreign particles that can impair the printout quality or cause unnecessary wear to the printhead.

To load media for printing from an external supply

1. (Optional) Fit the fanfold guides in either the upper or lower slot. The outer guide is adjustable for various media widths. The minimum width is 40 mm (1.58 in).
   - Fit the fanfold guide into the upper slot in the rear plate when the supply is at the same level as the printer or in peel-off mode.
   - Fit the fanfold guide into the lower slot in the rear plate when the supply is placed lower than the printer.

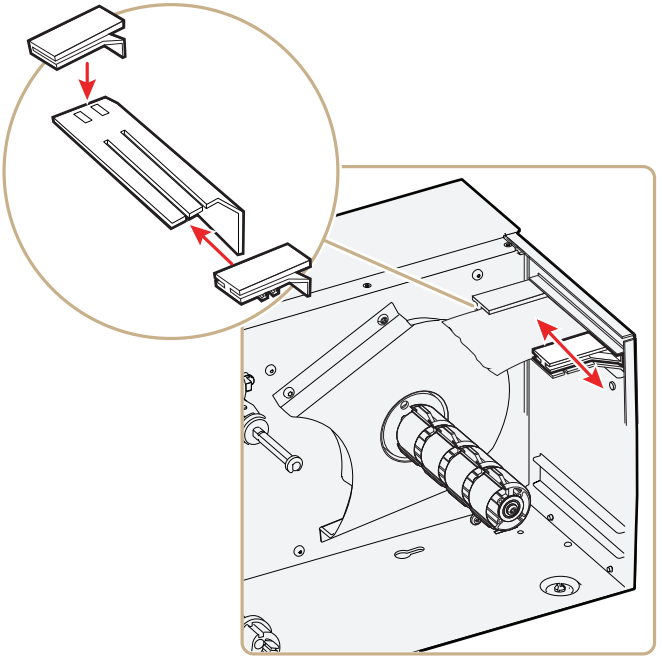

2 Feed the media through the slot in the rear plate.

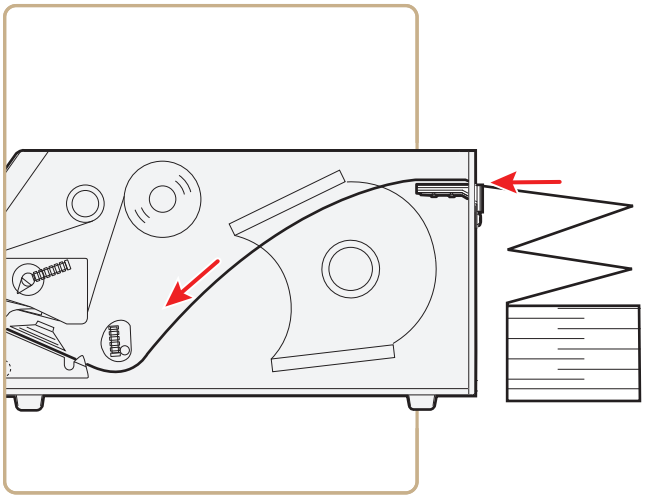

Feeding Media Through the Upper Slot

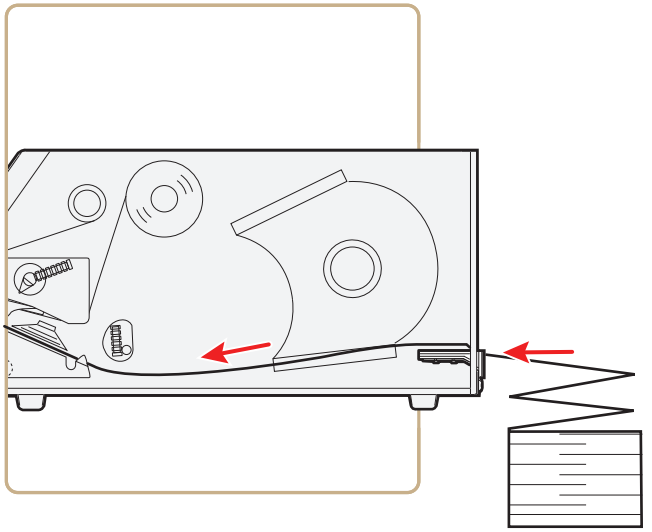

Feeding Media Through the Lower Slot

Loading Ribbon

The printer can perform direct thermal printing on special heat-sensitive media or thermal transfer printing on special ink-coated ribbon. The printer can use transfer ribbon rolls wound with the ink-coated side facing either outward or inward.

Thermal transfer printing lets you use a wide range of receiving face materials and provides a durable printout that is less vulnerable to external influences, such as oil, chemicals, heat, and sunlight than direct thermal printing. Make sure to select ribbon that matches the type of receiving face material and set up the printer accordingly.

To load ribbon for thermal transfer printing

1 Open the front door and media cover.

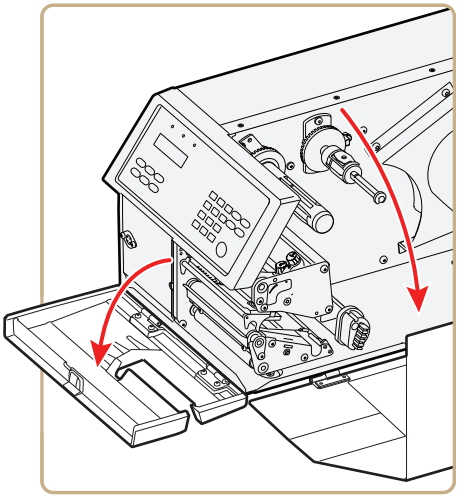

2 (PX6i only) Pull the locking handle down.

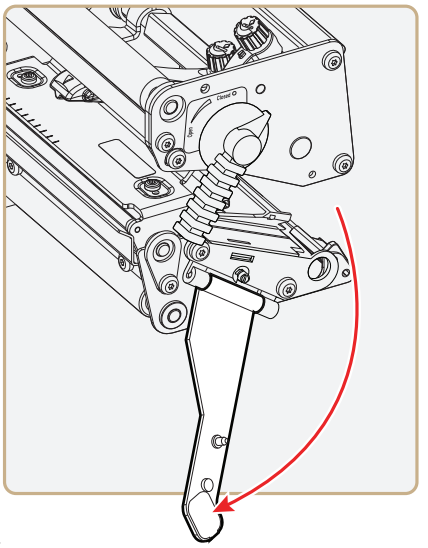

3 Turn the printhead lift lever counter-clockwise to raise the printhead.

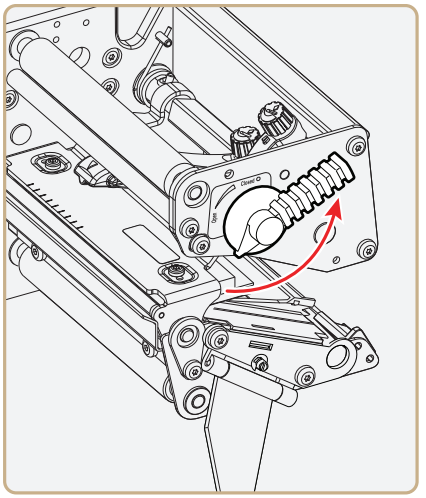

4 Remove any unused ribbon and the empty ribbon core.

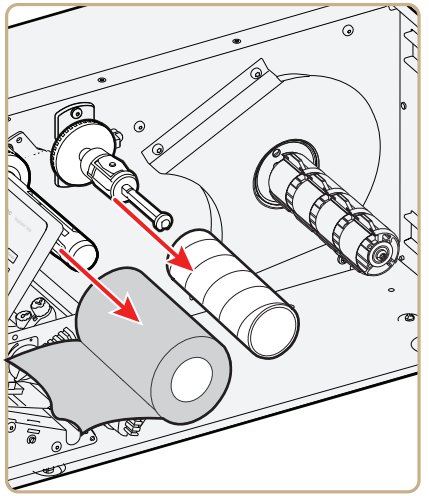

5 Adjust the ribbon supply bobbin for your ribbon.

- If your ribbon is 55 to 60 mm (2.16 to 2.3 in) wide, compress the ribbon supply bobbin and move it so it snaps into the first (innermost) groove.

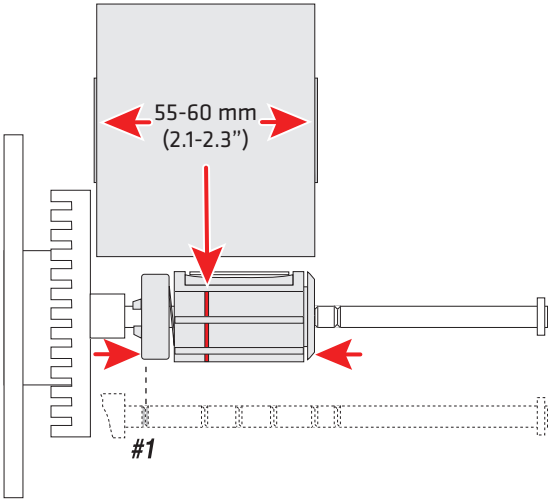

- If your ribbon is 88 to 90 mm (3.5 in) wide, compress the ribbon supply bobbin and move it so it snaps into the second groove.

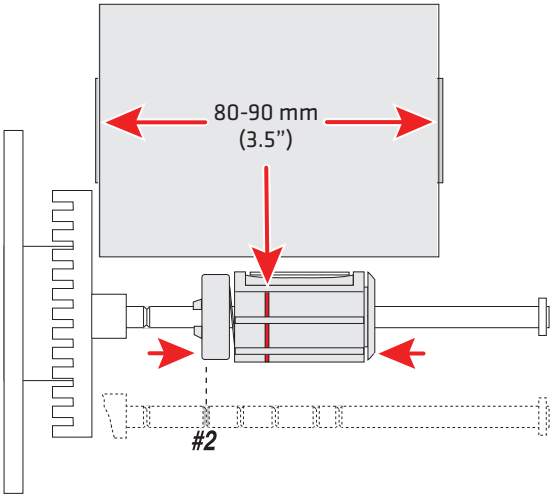

- If your ribbon is 110 mm (4.3 in) wide, compress the ribbon supply bobbin and move it so it snaps into the third (outermost) groove.

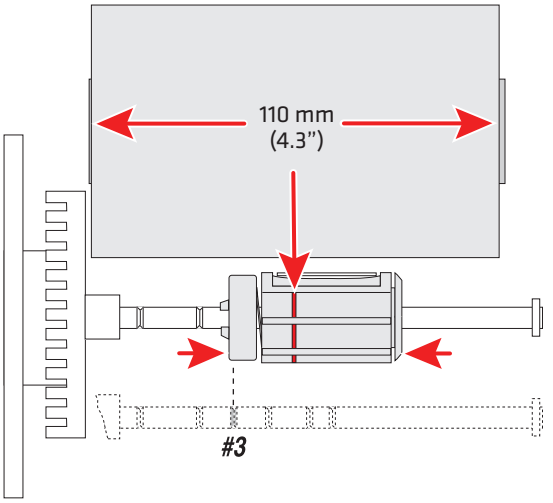

6 Press the ribbon roll onto the ribbon supply bobbin and route the ribbon through the print unit. Pull out 20 cm (8 in) of ribbon.

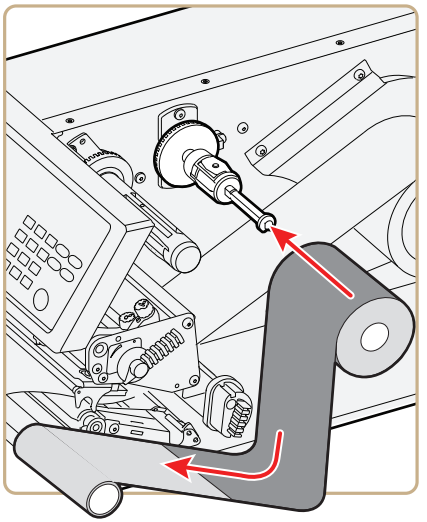

7 Without releasing the ribbon, turn the printhead lift lever clockwise to lower the printhead and lock the ribbon.

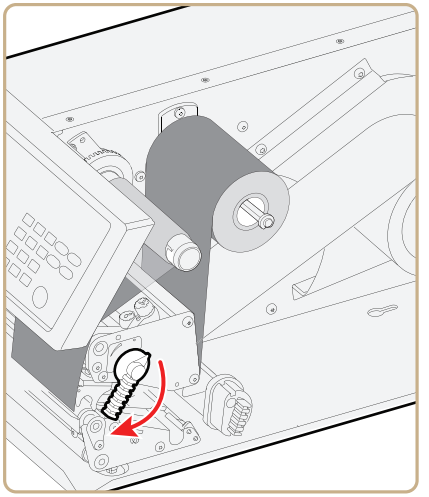

8 Press the cardboard core at the front end of the ribbon onto the rewind hub. During printing, the rewind hub rotates counter-clockwise.

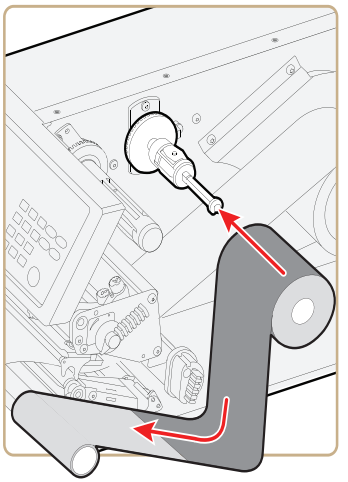

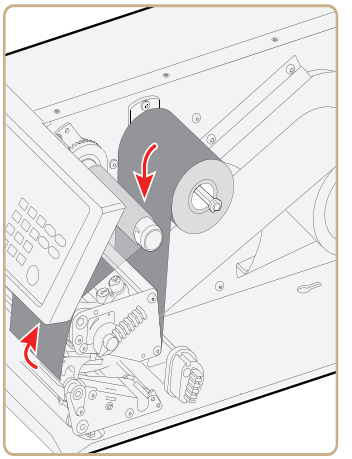

9 Turn the printhead lift lever counter-clockwise to raise the printhead.

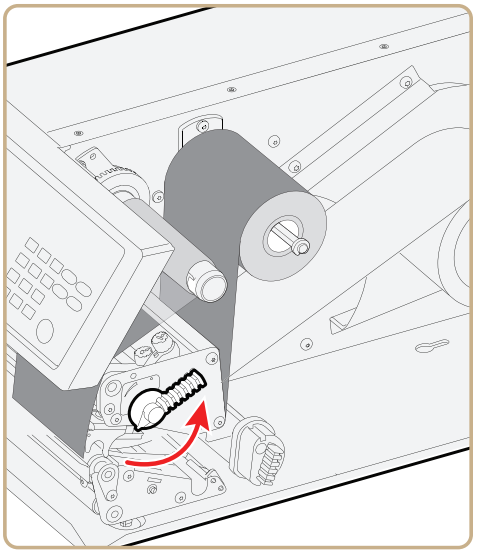

10 Wind up the ribbon until all of the transparent leader has passed the printhead and the ribbon becomes tight.

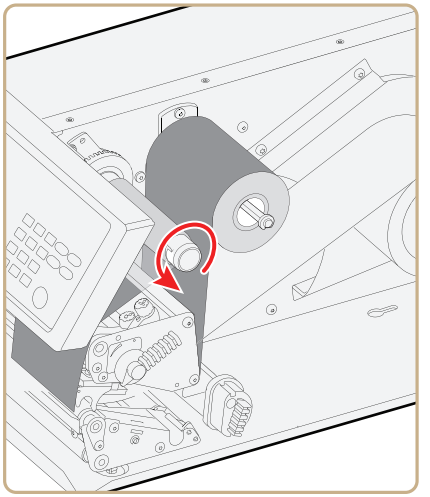

11 Turn the printhead lift lever clockwise to lower the printhead.

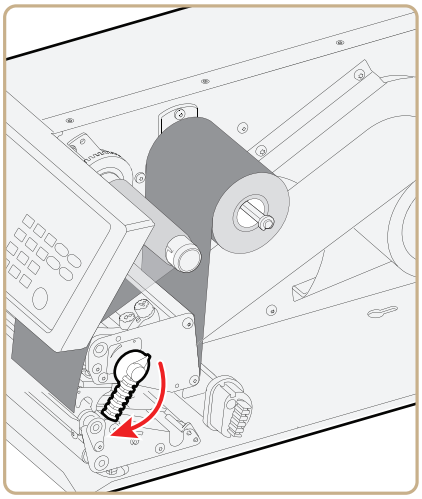

12 Close the front door and media cover.

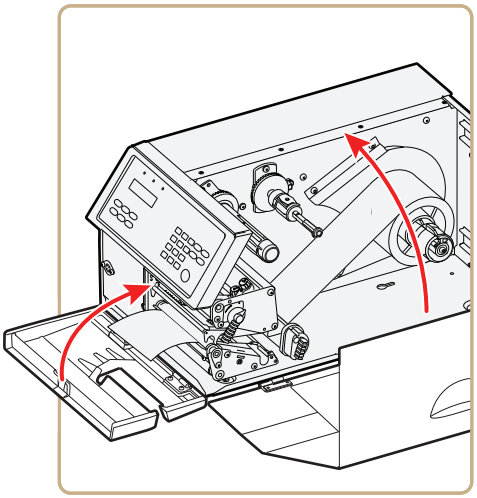

13 Set the Paper Type to Thermal Transfer Ribbon (TTR).

   a On your printer's keypad, press (Setup) to enter the Setup menu.

   b If you are using Fingerprint, go to **Media** > **Paper Type** > **Transfer**.

   If you are using IPL, go to **Media** > **Paper Type** > **TTR**.

   c Press (Enter).

   d Press (Setup) to exit the Setup menu.

Printing a Test Label

You can print a test label (perform a testprint) to:

- make sure that your printer is working properly.
- get your printer's setup, hardware, and network information.
- get RFID tag information.
- check print quality and determine which adjustments to make.

To perform a testprint

1 Press (Setup) to enter the Setup menu, and use the keypad to go to the TESTPRINT menu:

   - If you are running Fingerprint, go to **SETUP** > **PRINT DEFS** > **TESTPRINT**.
   - If you are running IPL, go to **SETUP** > **TEST/SERVICE** > **TESTPRINT** > **CONFIG**.

2 Select a testprint to perform. For more information, see the next tables.

Fingerprint Testprint Options

Testprint	Description
Diamonds	Prints a diamond pattern.
Chess	Prints a chess board pattern.
Bar Codes #1	Prints a horizontal set of bar codes.
Bar Codes #2	Prints a vertical set of bar codes.

Fingerprint Testprint Options (continued)

Testprint	Description
Setup Info	Contains current configuration parameters stored in the printer's memory, defined pages, defined formats, defined graphics, defined fonts, and any installed printer options.
Hardware Info	Contains printer memory information; printer mileage; printhead settings; firmware checksum, program, and version number.
RFID Test Label	Prints an RFID test label that includes the tag type name.
Network Info	Contains WINS name, MAC address, IP selection, IP address, netmask, default router, name server, mail server, primary WINS server, secondary WINS server, and network statistics.

IPL Testprint Options

Testprint	Description
Config	
SW	Contains current configuration parameters stored in the printer's memory, defined pages, defined formats, defined graphics, defined fonts, and any installed printer options.
HW	Contains printer memory information; printer mileage; printhead settings; firmware checksum, program, and version number.
Network	Contains WINS name, MAC address, IP selection, IP address, netmask, default router, name server, mail server, primary WINS server, secondary WINS server, and network statistics.
RFID Test Label	Prints an RFID test label that includes the tag type name.
Test Labels	
Pitch	Contains an even pattern of small dots that reveals failing printhead dots and variations of printout darkness due to uneven printhead pressure or bad energy regulation to the printhead.
Print Quality	Contains bar codes with different characteristics and useful information about the printer model, program version, print speed, and media sensitivity setup.

IPL Testprint Options (continued)

Testprint	Description
Format	
All > Print Formats	Contains a single format that you can use to evaluate the print quality of a particular format. This option prints labels for all the formats stored in the printer's memory.
Page	
All > Print Pages	Tests the ability of the printer to receive and print single or multiple pages of label data that is sent from the host. This option prints labels for all the pages stored in the printer's memory.
UDC	
All > Print UDC	Tests the ability of the printer to receive and print single or multiple user-defined characters (bitmap graphics) that are sent from the host. This option prints labels for all the UDCs stored in the printer's memory.
Font	Contains all the characters in a single font. This option prints labels for all the user-defined fonts (UDF) stored in the printer's memory.

Creating and Printing Labels

The easiest way to create and print labels is to use the label design software LabelShop®. You can download LabelShop from the PrinterCompanion CD that shipped with your printer, or you can download it from the Downloads page for your printer on the Intermec website at **www.intermec.com**.

You can also use Fingerprint and IPL to create and print labels. For more information, see the ***Intermec Fingerprint Command Reference Manual*** or the ***IPL Command Reference Manual***.

Printing on RFID Media

Media containing RFID tags is slightly thicker where the RFID tag is located. The slight thickness of this part of the label may affect print quality. For thermal transfer labels, Intermec recommends using a high-quality ink ribbon, such as TMX 2304 or TMX 1500.

To achieve the best possible print quality, follow these guidelines:

- After you load RFID media, restart the printer or run a TESTFEED to let the printer identify the RFID media type.
- If necessary, modify the TAGADJUST variable to make sure that the RFID labels are properly aligned with the antenna.
- If necessary, avoid printing on the thickest part of the label.
- For printers running Fingerprint:
  - If you are using thermal transfer labels, start with the ribbon constant set to 80 and the ribbon factor set to 25. You may need to adjust these values depending on the type of media you choose.
  - To write to Gen 2 RFID tags using the TAGFIELD command, set the start and length parameters to even numbers.
- For printers running IPL:
  - Start with the sensitivity set to 565. You may need to adjust this value depending on the type of media you choose.
  - To write to Gen 2 RFID tags, set the start and length parameters of the RFID tag field setup command (a) to even numbers.

For help configuring RFID parameters, see the ***Intermec Fingerprint Command Reference Manual*** or the ***IPL Command Reference Manual***.

2
Connecting the Printer

This chapter contains these sections:

- **Connecting the Printer to Your PC**
- **Connecting the Printer to Your Network**
- **Connecting Peripherals to the USB Host Port**

Connecting the Printer to Your PC

You can easily connect the printer to your PC using one of these ports:

- RS-232 serial port
- USB device port
- IEEE 1284 communications port (optional)

Connecting the Printer to a PC Through the Serial Port

You can use a serial connection to communicate with your PC and run PrintSet, LabelShop, or InterDriver. You can also use the serial port to send commands directly to the printer through a terminal connection, for instance with Telnet.

Before you can establish a serial connection, make sure that the settings on the PC match those of your printer.

Serial Port Settings on the Printer

Parameter	Default Setting
Baud rate	9600
Data bits (IPL) or Character length (Fingerprint)	8
Parity	None
Stop bits	1
RTS/CTS (Fingerprint only)	Disable
ENQ/ACK (Fingerprint only)	Disable
XON/XOFF, data to host (Fingerprint only)	Disable
XON/XOFF, data from host (Fingerprint only)	Disable
New line (Fingerprint only)	CR/LF
Receive buffer (Fingerprint only)	1024 bytes
Transmit buffer (Fingerprint only)	1024 bytes

To connect the printer to a PC through the serial port

1. Connect one end of the RS-232 cable that ships with your printer to the back of the printer and connect the other end of the cable to a serial COM port on the PC.
2. If necessary, change the PC serial port configuration to match your printer.

Connecting the Printer to a PC Through the USB Device Port

Note: You cannot communicate with the printer using PrintSet through a USB connection. To use PrintSet, you must be connected serially or through the Ethernet or 802.11 network.

Intermec recommends that you only connect one printer to each PC, either directly, or through a hub. To connect the printer to a PC through the USB device port, you need:

- a USB Type B to USB Type A cable.
- Intermec InterDriver® software, which is available on the PrinterCompanion CD that ships with the printer. To make sure you have the latest version of InterDriver, you may want to go to the downloads page for the printer on the Intermec website at **www.intermec.com**.

To connect the printer to a PC through the USB port

1. Download and install the InterDriver software on your PC.
2. Connect the USB cable to the Type B connector on the back of the printer and connect the other end to your PC.

You do not need to set up any parameters for USB communications.

Connecting the Printer to a PC Through the IEEE 1284 Port

You can use the parallel connection with LabelShop or Intermec InterDriver. The parallel port supports Universal Plug and Play (UPnP) and additional status reporting through IEEE 1284 nibble ID mode.

If you are using a parallel port to communicate with the printer, you need:

- an IEEE 1284 interface adapter installed in the printer. If you do not have the parallel interface installed in your printer, you can purchase the field installable option and have it installed by an authorized Intermec service technician. For help, contact your Intermec representative.
- a parallel cable to run between the printer and the PC.

To connect your printer to a PC parallel port

- Connect the IEEE 1284 cable connector to the interface adapter port on the back of the printer and connect the other end of the cable into a parallel port on the PC.

Connecting the Printer to Your Network

You can connect your printer to your network using the:

- integrated Ethernet interface.
- optional 802.11 wireless interface.

These network interfaces provide features such as security, FTP server, web server, and Alert handling.

Setting Up Ethernet Communications

Use the Ethernet port to set up the PX4i or PX6i as a network printer. If Ethernet is selected as your Network Type, when you turn on your printer, it automatically retrieves an IP address from the network (DHCP+BOOTP). You can use the network connection with LabelShop or the Intermec InterDriver. You can also use this connection to send commands directly to the printer through a terminal connection (Telnet) or FTP.

To connect your printer to your Ethernet network

1. Make sure that Ethernet is selected as your Network Type.
   a. On the keypad, press Setup to enter the **Setup** menu.
   b. Go to **SETUP** > **NETWORK** > **NETWORK TYPE** > **ETHERNET**.
   c. Press Setup again to exit the **Setup** menu.
2. Connect the cable from your Ethernet network to the Ethernet port on your printer's back plate.
3. Turn your printer off and then on.
4. Enter Information mode by pressing the i button. The printer displays interface information in five-second intervals. Note the IP address displayed under **I/O net1**.
5. On your PC, start your web browser.
6. Enter the IP address of your printer in the address field and press **Enter**. Your printer home page appears.

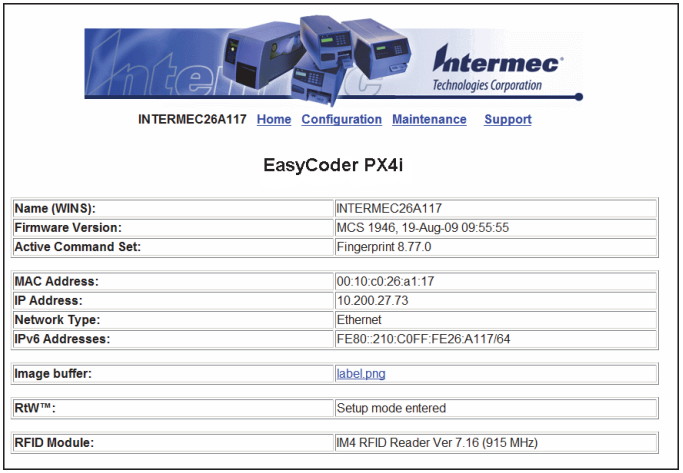

7. When you are prompted, enter your login and password. The default values are: login = `admin`, password = `pass`.

   For help using the printer web page to configure your printer, see **"Configuring Your Printer From the Printer Home Page" on page 76**.

If your network does not automatically assign an IP address, or the Intermec Ready-to-Work indicator is blinking to indicate a network error, you can use PrintSet (available on the PrinterCompanion CD or as a download from **www.intermec.com**) to correct the network settings.

Manually Configuring IP Settings

You can configure the IP settings of your printer by sending Fingerprint or IPL commands through a serial connection. After you configure the IP settings, you can disconnect the printer from your PC and communicate with the printer using Ethernet communications.

To configure the IP settings serially using Fingerprint

Note: You need to have administrator privileges to configure IP settings.

1. Connect the printer to your PC using a serial cable. For help, see **"Connecting the Printer to a PC Through the Serial Port" on page 56**.
2. Send the following commands to permanently assign the IP address, subnet mask, default router, and name server:

   ```
   setup "network,IP selection,manual"
   setup "network,IP address,xxx.xxx.xxx.xxx"
   setup "network,netmask,xxx.xxx.xxx.xxx"
   setup "network,default router,xxx.xxx.xxx.xxx"
   setup "network,nameserver,xxx.xxx.xxx.xxx"
   ```

   where *xxx* is a number from 0 to 255.
3. Disconnect the printer from the PC.
4. On your PC, enter the IP address of the printer in the address field of your web browser (for example http://10.200.27.94) and press **Enter**.

   The home page of the printer appears.

To configure the IP settings serially using IPL

1. Connect the printer to your PC using a serial cable. For help, see **"Connecting the Printer to a PC Through the Serial Port" on page 56**.

2 Send the following commands to permanently assign the IP address, subnet mask, default router, and name server:

`<SI>nn[,m1[,m2]]`

where:

n is the IP address of the printer in the format n.n.n.n, where n is a number from 0 to 255.

,m1 is the subnet mask address in the format n.n.n.n, where n is a number from 0 to 255.

,m2 is the router address in the format n.n.n.n, where n is a number from 0 to 255.

Note: You must specify at least two of the three parameters for the command to take effect.

3 Disconnect the printer from the PC.

4 On your PC, enter the IP address of the printer in the address field of your web browser (for example http://10.200.27.94) and press **Enter**.

The home page of the printer appears.

Setting Up 802.11 Radio Communications

If your printer has an optional 802.11 b/g radio, you can transfer and receive data using wireless communications. This manual assumes that you have already set up your wireless communications network including your access points. This section describes how to set up wireless security on your printer.

The printer supports these authentication modes:

- none
- WEP (64 bit and 128 bit)
- WPA Personal and Enterprise mode (802.1x authentication)
- WPA2 Personal and Enterprise mode (802.1x authentication)

Note: WPA and WPA2 Enterprise mode currently support PEAP, TTLS, LEAP, and EAP-FAST. For LEAP authentication, the printer supports Open EAP, but does not support Network EAP.

To set up the printer to work in your wireless network, you need:

- a serial cable.
- a PC running Windows or Linux.
- PrintSet. PrintSet is available on the CD that ships with your Printer. For the latest version of PrintSet, go to the Downloads page of the Intermec website at **www.intermec.com**.
- (optional) Serial port software such as HyperTerminal. If you are using IPL commands with HyperTerminal, you may want to be able to see the commands as you type them on your screen. For help, see **"Configuring Your Printer With Commands Sent From Your PC" on page 98**.

To set up the printer for 802.11 communications using PrintSet

1. Download and install PrintSet on your PC.
2. Connect one end of the serial cable to your printer, and connect the other end to your PC.
3. If necessary, change the serial port settings on your PC to match your printer:

Parameter	Default Setting
Baud rate	9600
Data bits	8
Parity	None
Stop bits	1

4. On your PC, start PrintSet.
5. In the **General Tasks** box, click **Add Printer**.
6. Step through the Add Printer Wizard until you have successfully added your printer.
7. In the **Printer Tasks** box, click **Wireless Setup Wizard**.
8. Step through the Wireless Setup Wizard to set up wireless network and security parameters.

To set up the printer for 802.11 communications using HyperTerminal

1. Connect one end of the serial cable to your printer, and connect the other end to your PC.
2. On your PC, open HyperTerminal and set these serial port parameters:

Parameter	Default Setting
Baud rate	9600
Data bits	8
Parity	None
Stop bits	1

3. From the host PC, check the wireless settings. For help, see **"Manually Configuring IP Settings" on page 60**.

   If you are running IPL, send this command to the printer:

   ```
   <STX><SI>wt<ETX>
   ```

   If you are running Fingerprint, send these commands to the printer:

   ```
   setup write "wlan","uart1:"
   setup write "8021x","uart1:"
   ```

4. Configure your printer to use the correct SSID and authentication modes. For help, see the next section, **"Configuring 802.11 Wireless Security Using IPL"** or **"Configuring 802.11 Wireless Security Using Fingerprint" on page 64**.
5. If you are using certificates for validation, Intermec recommends testing first without the certificate. Only after performing this test should you transfer the certificate to the printer. The printer can accept PEM (.pem), DER (.der), and PKCS #12 (.p12 or .pfx) certificates.
6. Verify that the printer is connected to the access point and make sure it has an IP address allocated to it.

Use the following sections to set most of your wireless communication settings. For more information, see the ***Intermec Fingerprint Command Reference Manual*** or the ***IPL Command Reference Manual***.

Configuring 802.11 Wireless Security Using Fingerprint

Use the following procedures to configure 802.11 wireless security parameters on your printer using Fingerprint.

To configure the printer to use WEP authentication

1 Send the following commands to login as an admin and set the SSID:

```
run"su -p pass admin"
setup write "wlan","uart1:"
setup "wlan","SSID","xxxxx"
```

where *xxxxx* can be from 0 to 32 ASCII characters, not including the double quote.

To enter non-alphanumeric octets, use "%*nn*," where *nn* is two hexadecimal digits representing the value of the character

Note: The default password for logging in as an admin is "pass." If you have changed the password, you will need to use your password instead of "pass."

2 Send the following commands to configure the WEP keys. The following example sets WEP key 1 to 01234 and enables WEP key 1.

```
setup "wlan","WEP1","0x3031323334"
setup "wlan",".WEP_KEY","1"
setup "wlan","ACTIVE","1"
setup write "wlan","uart1:"
```

To configure the printer to use WPA-PSK or WPA2-PSK mode

1 Send the following commands to login as an admin and set the SSID:

```
run"su-p pass admin"
setup write "wlan","uart1:"
setup "wlan","SSID","xxxxx"
```

where *xxxxx* can be from 0 to 32 alphanumeric characters.

To enter non-alphanumeric octets, use "%*nn*," where *nn* is two hexadecimal digits representing the value of the character

Note: The default password for logging in as an admin is "pass." If you have changed the password, you will need to use your password instead of "pass."

2 Send one of the following WPA/WPA2 ON commands to turn on WPA or WPA2 authentication. Send the WPA-PSK or WPA2-PSK command to set a pre-shared key:

```
setup "wlan","WPA","OFF"
setup "wlan","WPA2","ON"
setup "wlan","WPA_PSK","xxxxxxxxxx"
setup "wlan","ACTIVE","1"
setup write "wlan","uart1:"
```

where *xxxxxxxxxx* is a value between 8 and 64 characters.

To configure the printer to use WPA or WPA2 Enterprise mode

1 Send the following commands to login as an admin and set the SSID:

```
run"su-p pass admin"
setup write "wlan","uart1:"
setup "wlan","SSID","xxxxx"
```

where *xxxxx* can be from 0 to 32 alphanumeric characters.

To enter non-alphanumeric octets, use "%*nn*," where *nn* is two hexadecimal digits representing the value of the character

Note: The default password for logging in as an admin is "pass." If you have changed the password, you will need to use your password instead of "pass."

2 Send one of the following WPA/WPA2 ON commands to set up WPA-802.1x or WPA2-802.1x authentication. You should also send the WPA_PSK command that does not contain a value:

```
setup "wlan","WPA","OFF"
setup "wlan","WPA2","ON"
setup "wlan","WPA_PSK",""
setup write "wlan","uart1:"
```

To view the 802.1x values, send this command:

```
setup write "8021x","uart1:"
```

3. Send these commands to configure the EAP_TYPE:

   ```
   setup "8021x","EAP_TYPE","xxxx"
   ```

   where *xxxx* can be OFF, LEAP, PEAP, TTLS, or EAP-FAST.

   ```
   setup "8021x",".EAP_USER","xxxx"
   setup "8021x","EAP_PASS","xxxx"
   ```

   where *xxxx* is the unique username and the unique password for this protocol.

4. If you are using TTLS, you may need to send this command to set the TTLS outer name:

   ```
   setup "8021x","TTLS_USER","xxxx"
   ```

   where *xxxx* is the outer name.

5. If you are using EAP-FAST, you can use PAC and ACQUIRE_PAC commands. The PAC setting specifies the PAC file to use for EAP-FAST authentication. The ACQUIRE_PAC setting checks to see if automatic PAC file provisioning is enabled. You can set ACQUIRE_PAC to on or off.

   - Send the following command to set PAC to use /tmp/my.pac with a pass phrase of "verysecret":

     ```
     setup "8021x","PAC","/tmp/my.pac@verysecret"
     ```

   - Send the following command to set ACQUIRE_PAC to on:

     ```
     setup "8021x","ACQUIRE_PAC","ON"
     ```

6. If you are using certificates for validation, here are some commands you may need to use.

   - Send the following commands to set a certificate and enable validation:

     ```
     setup "8021x","CA_CERT","c:/test.pfx@export"
     setup "8021x","VALIDATE","ON"
     ```

     where *c:/test.pfx* is the location and name of the certificate on the printer and *export* is the passphrase.

- Send the following commands to set a common name for server 1 and server 2:

  ```
  setup "8021x",".SERVER_CN1","xxxxxxxxxx"
  setup "8021x",".SERVER_CN2","xxxxxxxxxx"
  ```

  where *xxxxxxxxxx* is at least 8 characters but less than 96 characters.

- Send the following commands to make sure your values match those used by the access point:

  ```
  setup write "8021x","uart1:"
  setup write "wlan","uart1:"
  ```

- You may need to send the following command several times for the wireless station to connect:

  ```
  setup "wlan","ACTIVE","1"<ETX>
  ```

Configuring 802.11 Wireless Security Using IPL

Use the following procedures to configure 802.11 wireless security parameters on your printer using IPL.

To configure the printer to use WEP authentication

1 Send the following commands to login as an admin and set the SSID:

```
<STX><ESC>.x,su -p pass admin<ETX>
<STX><SI>ws,SSID,xxxxx<ETX>
```

where *xxxxx* can be from 0 to 32 ASCII characters.

To enter non-alphanumeric octets, use "%*nn*," where *nn* is two hexadecimal digits representing the value of the character

Note: The default password for logging in as an admin is "pass." If you have changed the password, you will need to use your password instead of "pass."

2 Send the following commands to configure the WEP keys. The following example sets WEP key 1 to 01234 and enables WEP key 1.

```
<STX><SI>ws,WEP1,0x3031323334<ETX>
<STX><SI>ws,.WEP_KEY,1<ETX>
```

3 Send the following command to activate the settings.

```
<STX><SI>ws,ACTIVE,1<ETX>
```

To configure the printer to use WPA-PSK or WPA2-PSK mode

1 Send the following commands to login as an admin and set the SSID:

```
<STX><ESC>.x,su -p pass admin<ETX>
<STX><SI>ws,SSID,xxxxx<ETX>
```

where *xxxxx* can be from 0 to 32 alphanumeric characters.

To enter non-alphanumeric octets, use "%*nn*," where *nn* is two hexadecimal digits representing the value of the character

Note: The default password for logging in as an admin is "pass." If you have changed the password, you will need to use your password instead of "pass."

2 Send one of the following commands to turn on WPA or WPA2 authentication. Send the WPA-PSK or WPA2-PSK command to set a pre-shared key:

```
<STX><SI>ws,WPA,OFF<ETX>
<STX><SI>ws,WPA2,ON<ETX>
<STX><SI>ws,WPA_PSK,xxxxxxxxxx<ETX>
```

where *xxxxxxxxxx* is a value between 8 and 64 characters.

3 Send the following command to activate the settings:

```
<STX><SI>ws,ACTIVE,1<ETX>
```

To configure the printer to use WPA or WPA2 Enterprise mode

1 Send the following commands to login as an admin and set the SSID:

```
<STX><ESC>.x,su -p pass admin<ETX>
<STX><SI>ws,SSID,xxxxx<ETX>
```

where *xxxxx* can be from 0 to 32 alphanumeric characters.

To enter non-alphanumeric octets, use "%*nn*," where *nn* is two hexadecimal digits representing the value of the character

Note: The default password for logging in as an admin is "pass." If you have changed the password, you will need to use your password instead of "pass."

2. Send one of the following commands to enable WPA-802.1x or WPA2-802.1x authentication. You should also send the WPA_PSK command that does not contain a value:

   ```
   <STX><SI>ws,WPA,OFF<ETX>
   <STX><SI>ws,WPA2,ON<ETX>
   <STX><SI>ws,WPA_PSK, <ETX>
   ```

3. Send these commands to configure the EAP_TYPE:

   ```
   <STX><SI>ws,EAP_TYPE,xxxx<ETX>
   ```

   where *xxxx* can be OFF, LEAP, PEAP, TTLS, or EAP-FAST.

   ```
   <STX><SI>ws,.EAP_USER,xxxx<ETX>
   <STX><SI>ws,EAP_PASS,xxxx<ETX>
   ```

   where *xxxx* is the unique username and the unique password for this protocol.

4. If you are using TTLS, you may need to send this command to set the TTLS outer name:

   ```
   <STX><SI>ws,TTLS_USER,xxxx<ETX>
   ```

   where *xxxx* is the outer name.

5. If you are using EAP-FAST, you can use PAC and ACQUIRE_PAC commands. The PAC setting specifies the PAC file to use for EAP-FAST authentication. The ACQUIRE_PAC setting checks to see if automatic PAC file provisioning is enabled. You can set ACQUIRE_PAC to on or off.

   - Send the following command to set PAC to use /tmp/my.pac with a pass phrase of "verysecret":

     ```
     <STX><SI>ws,PAC,/tmp/my.pac@verysecret<ETX>
     ```

   - Send the following command to set ACQUIRE_PAC to on:

     ```
     <STX><SI>ws,ACQUIRE_PAC,ON<ETX>
     ```

6 If you are using certificates for validation, here are some commands you may need to use.

- Send the following commands to set a certificate and enable validation:

  ```
  <STX><SI>ws,CA_CERT,c:/testCA.pfx@export<ETX>
  <STX><SI>ws,VALIDATE,ON<ETX>
  ```

  where *c:/testCA.pfx* is the location and name of the certificate on the printer and *export* is the passphrase.

- Send the following commands to set a common name for server 1 and server 2:

  ```
  <STX><SI>ws,.SERVER_CN1,xxxxxxxxxx<ETX>
  <STX><SI>ws,.SERVER_CN2,xxxxxxxxxx<ETX>
  ```

  where *xxxxxxxxxx* is at least 8 characters but less than 96 characters.

- Send the following command to make sure your values match those used by the access point:

  ```
  <STX><SI>wt<ETX>
  ```

  All variables are returned with the exception of EAP_PASS which always returns "****" if configured and CA_CERT which transmits the name of the last certificate authority successfully installed. An additional read-only variable for the supplicant state, called STATE, is also returned.

- You may need to send the following command several times for the wireless station to connect:

  ```
  <STX><SI>ws,ACTIVE,1<ETX>
  ```

Connecting Peripherals to the USB Host Port

You can connect these peripheral devices to the USB host interface port on the printer:

- USB mass storage device
- Keyboard
- Bar code scanner
- USB hub

Using a USB Mass Storage Device

You can use a USB mass storage device (thumb drive) to store additional fonts and images for the printer. You can also use the device to upgrade your firmware. For more information on using the USB mass storage device to upgrade the printer, see **"Upgrading Firmware" on page 102**.

To verify the USB storage device is supported by your printer, insert the USB storage device in the appropriate slot on the back of your printer. On the display screen, one of the following status messages briefly appears:

- USB memory stick connected
- USB memory stick not supported

If no status message appears when you insert the USB storage device, you can manually verify the USB storage device is supported using HyperTerminal.

To verify the USB storage device is supported by your printer

1. Connect one end of your serial cable to your printer, and connect the other end to your PC.
2. On your PC, open HyperTerminal.
3. In HyperTerminal, use one of the following Fingerprint commands:
   - Type **DEVICES.** The list of devices your printer supports appears. If the USB storage device is supported, it appears as drive d: in this list.
   - Type **Run "cd d:"** and press **Enter.**
     Type **Run "ls"** and press **Enter.** If the USB storage device is supported, the contents of the USB storage device appears.

Connecting a Keyboard to the USB Host Port

You can use an external USB keyboard to input data in Fingerprint applications. Some applications may require more complex input from users than the simple push of a button.

The printer comes with five keyboard layouts: US, Swedish, French, German, and User Defined.

To change the keyboard layout

1. Plug your USB keyboard into the USB host connector on the back of the printer.
2. Turn on the printer.
3. On your printer keypad, press Setup.
4. Navigate to **COM** > **USB KEYBOARD**.
5. Choose a keyboard layout.
6. Exit Setup mode by pressing Setup again.

Connecting a Bar Code Scanner to the USB Host Port

If your printer is running Fingerprint, you can connect a HID (Human Interface Device) bar code scanner to the printer. The "usbhost:" device receives data from the scanner the same way it does from a USB keyboard. You can then use this data in a Fingerprint application.

The keyboard layout you choose (see the previous procedure) applies for connected scanners too.

Connecting a USB Hub to the USB Host Port

You can connect a USB hub to the printer so that you can connect several USB devices to the printer at the same time.

Note: If the USB hub is not powered, you can only connect one USB mass storage device and one HID (keyboard or scanner) peripheral to the USB hub at a time. If the USB hub is powered, you can connect multiple USB mass storage devices and multiple HID peripherals at once.

3
Configuring the Printer

Use this chapter to understand how to configure the printer, upgrade firmware, and download fonts and graphics. This chapter contains these sections:

- **Configuring Your Printer**
- **Choosing an Ethernet or Wireless Network**
- **Upgrading Firmware**
- **Downloading Fonts and Graphics**

Configuring Your Printer

You can change the configuration settings of your printer:

- directly from the screen.
- from the printer home page.
- using PrintSet.
- using commands sent from your PC.
- remotely using SmartSystems Foundation.
- remotely using Wavelink Avalanche.

Configuring Your Printer From the Screen

To configure your printer from the screen, you need to enter Setup mode.

To enter Setup mode

- Press the Setup button.

You mainly use the arrow keys to navigate in Setup mode.

Navigating in Setup Mode

Press This Key:	To Do This:
‹ or ›	Scroll through the main menu and sub-menus.
⌄	Select a sub-menu item.
⌃	Exit a sub-menu without changing the setting.
Enter	Select a sub-menu item.
Setup	Exit Setup mode.

Use the following illustrations to understand the Setup menu. The main menus of the setup tree are organized in a loop. Each main menu branches out to a number of sub-menus. If you have optional accessories installed in your printer, the firmware adds the necessary setup parameters to the Setup tree.

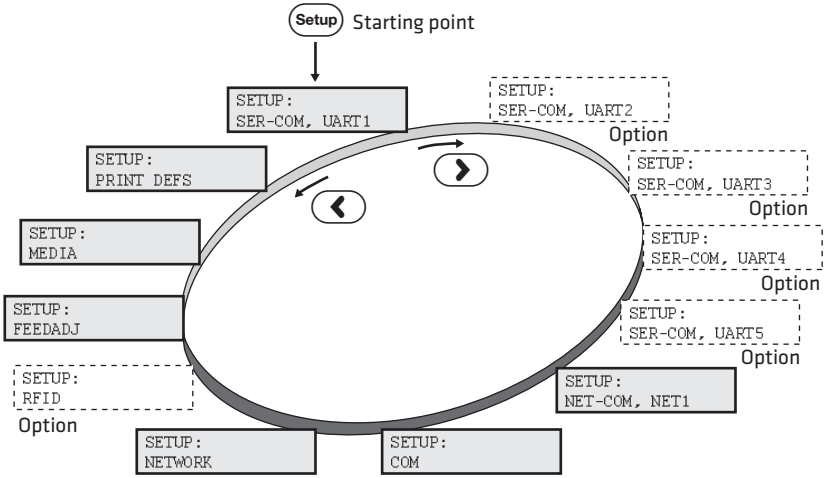

The Main Menus in Setup Mode for Fingerprint

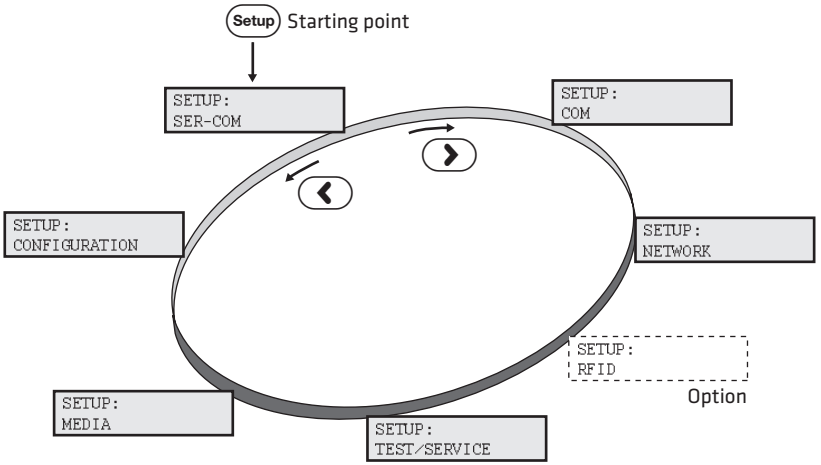

The Main Levels of the Setup Menu in IPL

For more information on the IPL and Fingerprint menu systems, see Appendix C, **"Fingerprint and IPL Setup Menus" on page 165**.

Configuring Your Printer From the Printer Home Page

If you are using an Ethernet or 802.11 wireless connection, you can change configuration settings from your printer's home page.

Note: You should have already connected your printer to your network and obtained an IP address. For help, see **"Connecting the Printer to Your Network" on page 58**.

To access your printer's home page

1. Start your web browser application.
2. In the address field, enter the IP address of your printer.
3. Press **Enter**. Your printer's home page appears.

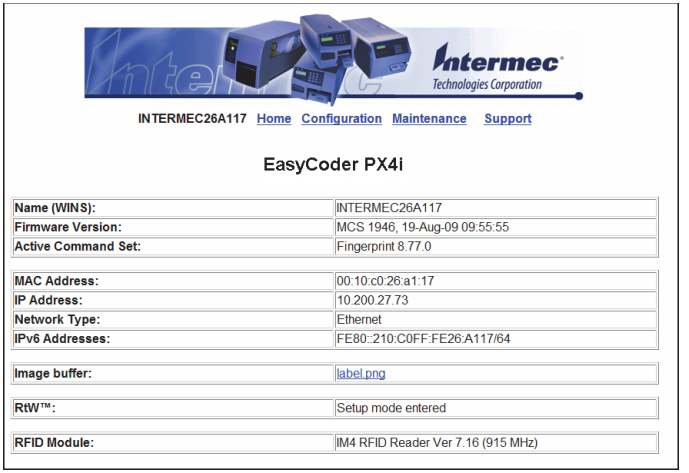

The home page displays the assigned name, firmware version, Active Command Set, MAC address, and IP address of your printer. The home page also displays the contents of the image buffer, as well as the status of the Ready-to-Work indicator.

4. Click **Configuration**.
5. Click the link for the settings you want to configure.
6. When you are prompted, enter your login and password. The default values are: login = `admin`, password = `pass`.

Use the next sections to understand and configure the settings on each configuration page.

Configuring Communications Settings

Use the communications page to configure serial communications, the communications interface, and the keyboard layout.

To configure communications settings

1 Click **Printer** > **Communication**.

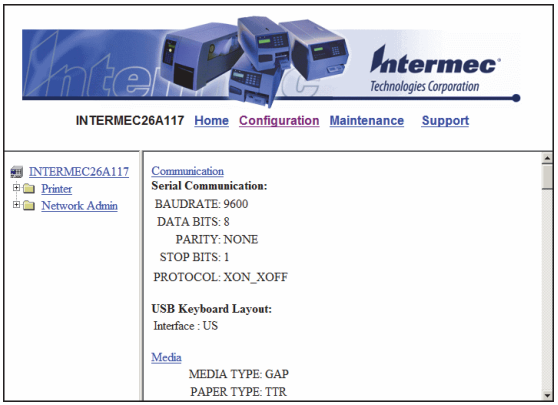

2 Choose the settings you want to change.

3 Click **Submit Setup**.

Configuring Media Settings

Use the media page to view and change media settings such as XSTART position, media type, and contrast.

To configure media settings

1 Click **Printer** > **Media**.

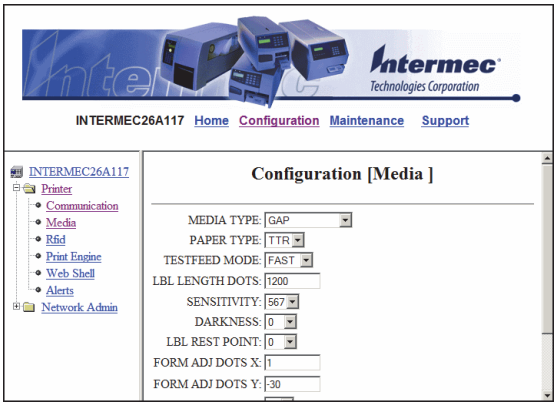

2 Enter the correct information for the media you are using.

3 Click **Submit Setup**.

Configuring RFID Settings (Printer With RFID Option)

Use the RFID page to configure settings for printing on RFID media.

To configure media settings

1 Click **Printer** > **Rfid**.

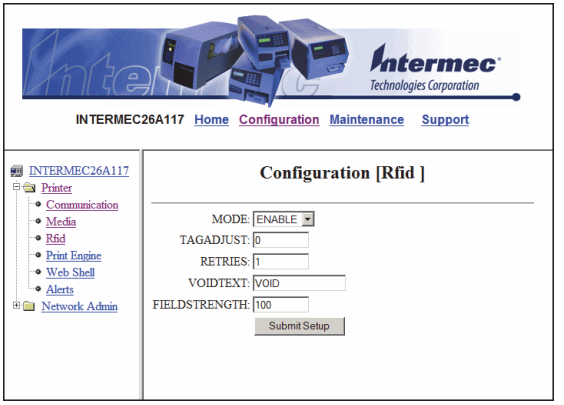

2 Enter the correct information for the RFID media you are using.

3 Click **Submit Setup**.

Configuring Print Engine Settings

Use the print engine page to adjust the media feed direction (start and stop adjust positions) and print speed. The value of the head resistance is read-only and is measured by the firmware when the printer starts up.

To configure print engine settings

1 Click **Printer** > **Print Engine**.

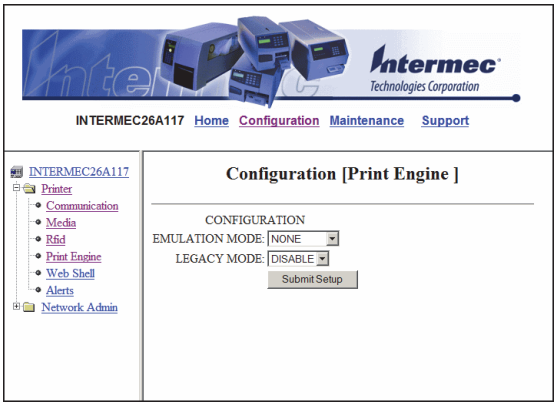

2 Enter the correct information for the print engine.

3 Click **Submit Setup**.

Configuring Web Shell Settings

Use the Web Shell page to view and change test and default settings. You can also use the Web Shell page to print test labels and change the command language.

To configure Web Shell settings

1 Click **Printer** > **Web Shell**.

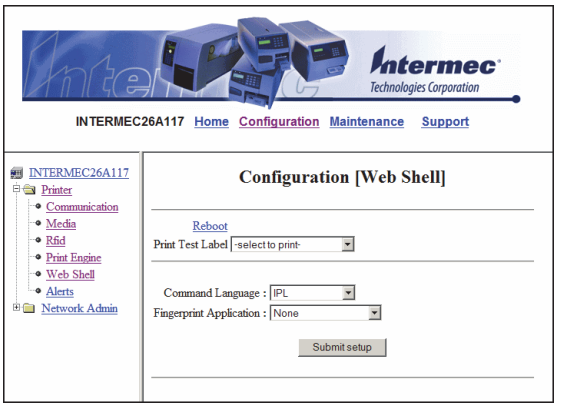

2 Select the action you want to take or the setting you want to change.

- For the actions in the top of the screen, the printer performs the action and may prompt you to reboot the printer.
- For the settings in the bottom of the screen, select the settings you want and click **Submit Setup**. A message appears stating, "Application change will take effect at reboot." You can select Reboot or wait until you are done making other configuration changes.

Use the following table to understand the Web Shell settings.

Understanding the Web Shell Settings

Setting	*Description*
Testfeed [value]	Calibrates the label stop sensor performs a testfeed. Selecting this setting is equivalent to issuing the TESTFEED command on the printer.
Ribbon Sensor [value]	Detects if the printer runs out of ribbon during printing.

Understanding the Web Shell Settings (continued)

Setting	Description
Default Setup	Returns the printer to factory default settings. Passwords, alerts, and the selected application are not changed.
Reboot	Reboots the printer.
Print Test Label	Prints the predefined test label you choose.
Command Language	Sets the command language to Fingerprint, Direct Protocol, IPL, ZSim, or DSim. You need to reboot the printer for the change to take effect.
Fingerprint Application	Defines the application to run as the default on startup. You need to reboot the printer for the change to take effect.
Standard I/O	Defines the port the printer listens to. You need to reboot the printer for the change to take effect.

Configuring Alerts

Use the Alerts page to view and change the printer alert settings.

To configure alerts

1 Click **Printer** > **Alerts**.

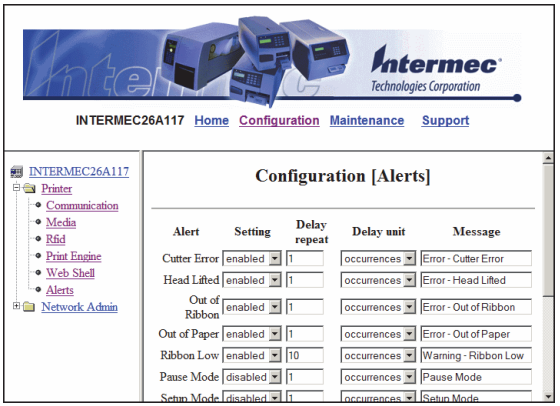

2 Change the alert settings:

- From the **Setting** list, choose **Enabled** or **Disabled**.
- In the text field, specify a **Delay repeat**.
- In the **Delay Unit** list, select **seconds** or **occurrences**.
- In the **Message** text field, enter a message.

3 Select the **Notification method**.

4 Click **Submit Settings**.

Use the following table to understand the Alert Settings.

Understanding the Alert Settings

Setting	Description
Label Not Taken (Fingerprint only)	Sent when the printed label is not taken from the printer. This setting applies to label and ticket media and requires an optional label taken sensor.
Cutter Error	There was an error related to the label cutter.
Head Lifted	A printer job was sent to the printer while the printhead was lifted.
Out of Ribbon	You have thermal transfer ribbon selected and the printer is out of ribbon.
Pause Mode	The printer is in Pause mode.
Setup Mode	The printer is in Setup mode.
Error Condition (Fingerprint only)	An error has occurred in the Fingerprint application. The error does not have to be critical to the print job for the printer to send this alert.
Application Break (Fingerprint only)	A running Fingerprint application has been interrupted manually or because of an error.
Print Job Complete (Fingerprint only)	The print job has been successfully completed.
Odometer Count 1	The amount of media printed has reached a preset amount, measured in meters or in number of labels. The Delay repeat setting represents how often the alert message will be sent when the preset value is reached.
Notification Method	The method used to send an alert message. You can choose from mail, SNMP-trap, or both.

Configuring General Network Settings

Use the General network page to view the printer name, change passwords, and set restrictions.

To configure general network settings

1 Click **Network Admin** > **General**.

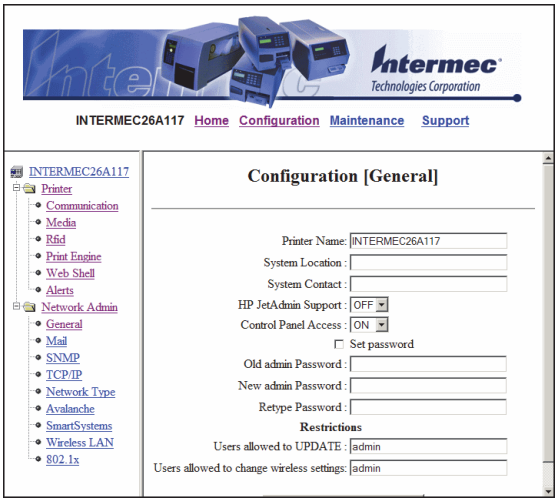

2 View or update your settings.

Note: To enter a new password, you need to check the **Set password** check box.

3 Click **Submit General settings**.

Use the following table to understand the general network settings.

Understanding the General Network Settings

Setting	Description
Printer Name	The network identification name (WINS name) of the printer. The default name is INTERMEC followed by the last six positions of the MAC address.
System Location	(Optional) The printer location.
System Contact	(Optional) The printer administrator.
Set Password	You must check this box if you want to change the admin password.
Old Admin Password	You need to enter the old password before you can change the password.
New Admin Password	The new password you want to use.
Restrictions	Sets restrictions on who is allowed to upgrade the printer firmware or view and change network settings. You cannot remove "admin" from the list of authorized users. **Users allowed to update:** Defines who may perform a firmware upgrade using FTP, PrintSet, or IFAB. This setting does not affect upgrading from a Compact Flash card. **Users allowed to read/write protected LAN1 settings:** (Fingerprint only) Defines who may read/write settings in the LAN1 section. **Users allowed to change network settings:** (Fingerprint only) Defines who may change the network node in the setup. This setting is not supported if you are setting up the printer from its internal keyboard. **Users allowed to change wireless settings:** Defines who may change WLAN or 802.1x settings.

Configuring Mail Settings

Use the mail settings page to view and change e-mail (SMTP) server settings.

To configure mail settings

1 Click **Network Admin** > **Mail**.

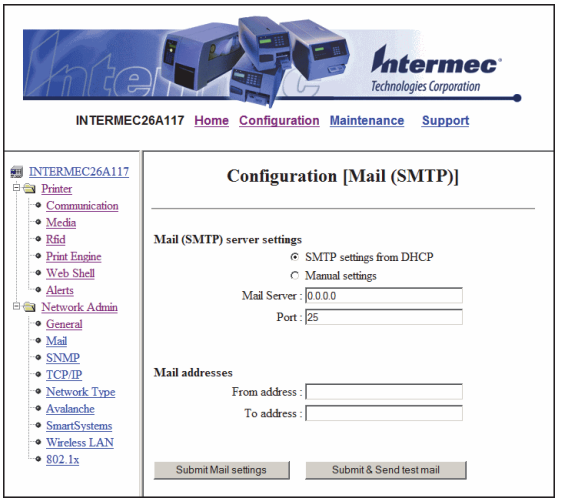

2 Select the mail server settings and enter mail addresses.

3 Click:

- **Submit Mail Settings** to send the changes to the printer.
- **Submit & Send test mail** to send the changes to the printer and test your new settings.

Use the following table to understand the mail settings.

Understanding the Mail Settings

Setting	Description
Mail (SMTP) Server	Choose a configuration method for your mail server settings: • **SMTP settings from DHCP:** Choose this setting if you want the printer to receive settings automatically from your DHCP server. This setting requires that you choose DHCP and IP Selection in the TCP/IP section. • **Manual settings:** Choose this option to manually configure the Mail Server address and port. The default port is 25.
Mail addresses	Defines the e-mail addresses to use when the printer sends alert messages: • **From address:** The address that displays as the sender of alert messages. E-mail will be returned to this address if the recipient is unreachable. To prevent e-mail bounces when the recipient is unreachable, leave this field empty. • **To address:** The recipient of alert messages. To enter several addresses, separate them with a comma (,) or a semicolon (;).

Configuring SNMP Settings

Use the SNMP page to view and change SNMP settings.

To configure SNMP settings

1 Click **Network Admin** > **SNMP**.

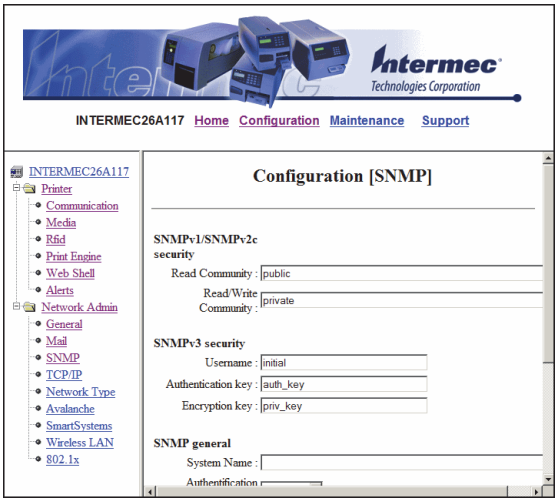

2 Change the SNMP settings.

3 Click **Add** to add trap settings. You can define up to four authentication failure traps.

After you add a trap, it appears in the Trap Address Settings list. You can edit or delete each trap in the list by clicking **Edit** or **Delete**.

4 Click **Submit SNMP settings**.

Use the following table to understand SNMP settings.

Understanding the SNMP Settings

Setting	Description
Read Community	Community with rights to read the SNMP MIBs.
Read/Write Community	Community with rights to read and write SNMP MIBs.
Username	Username when using SNMPv3. The default value is “initial”.
Authentication Key	The authentication key for SNMPv3. The default value is “auth_key”.
Encryption Key	The privacy key for SNMPv3. The default value is “priv_key”.
System Name	Administrative name for the SNMP node.
Authentication Failure Trap	Defines if a trap is sent when an unauthorized SNMP request tries to access the printer. Choose Enable to send the trap.
Trap Address Settings	Click **Add** to specify these trap address settings: • **Trap Address:** IP address of the receiver of SNMP traps. You can specify up to four trap addresses. • **Trap Port:** The port where SNMP traps are sent. The default port if 162. • **Trap Community:** Defines the community to which SNMP traps will be sent. • **Friendly Name:** A user-defined text string that identifies the trap. • **Trap Enable Status:** Defines whether the specified trap is enabled.

Configuring TCP/IP Settings

Use the TCP/IP settings page to view and change TCP/IP network settings.

To configure TCP/IP settings

1 Click **Network Admin** > **TCP/IP**.

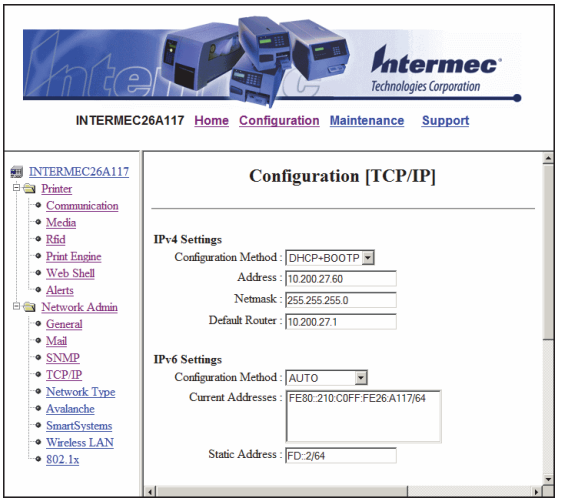

2 View or update your settings.

3 Click **Submit TCP/IP settings**.

Use the following table to understand the TCP/IP settings.

Understanding the TCP/IP Settings

Setting	*Description*
IPV4 Settings	**Configuration method:** The method by which an IP address is assigned to the printer. You can choose between DHCP, BOOTP, DHCP+BOOTP, or MANUAL. **Address:** The current IP address of the printer. **Netmask:** Manually assigned netmask for the printer. **Default Router:** The IP address of the default router.

Understanding the TCP/IP Settings (continued)

Setting	Description
IPV6 Settings	**Configuration method:** The method by which an IP address is assigned to the printer. You can choose between: • **AUTO:** The IP address is obtained using stateless auto-configuration. This is the default configuration method. • **AUTO+DHCP:** The IP address is obtained using stateless auto-configuration, but DNS options are obtained using DHCP. • **DHCP:** The IP address and DNS options are obtained using DHCP. • **MANUAL:** The IP address is set to a static address that you enter in the Static Address field. **Current addresses:** A list of all the currently configured IP addresses for the Ethernet interface. The address starting with FE80:: is the link-local address and is available regardless of the configuration method you choose. **Static address:** This address applies if you selected manual as the configuration method. The IP address is specified as an address and a prefix separated by a slash. You can use "::" to represent a large number of consecutive zeros. You should typically set the prefix to 64. Example: 2001:DB8:0:F101::2/64
Name Resolution	**DNS Server:** The IP address of the name server. **DNSv6 Server:** The IP address of the name server for IPv6. **WINS Server (Primary and Secondary):** The IP addresses of the primary and secondary WINS servers. If you chose DHCP or BOOTP for the configuration method, you may see the currently assigned WINS IP addresses depending on the configuration of your DHCP server.
Printer Service	**NET1 TCP Port Number:** The port number for raw TCP. The default is 9100. **NET1 Queuing:** Determines whether queuing for the TCP port is turned on, off, or enabled for multiple network connections (Multi).

Configuring the Network Type

Use the Network Type page to choose whether you are using an Ethernet or wireless 802.11 network.

To configure the network type

1 Click **Network Admin** > **Network Type**.

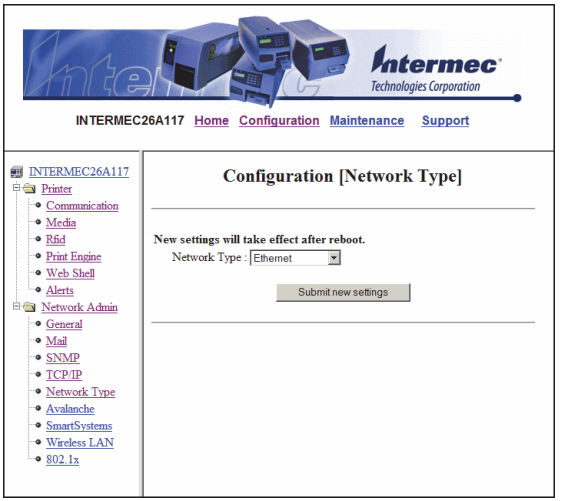

2 Select either **Ethernet** or **Wireless 802.11**.

3 Click **Submit new settings**.

4 Reboot the printer for the changes to take effect.

Note: Once you change the network type to Wireless 802.11, you cannot communicate with the printer using Ethernet. You need to change the command through the Setup menu or send a command through a serial connection.

Configuring Avalanche Settings

Use the Avalanche page to view and change Wavelink Avalanche settings.

To configure Avalanche settings

1 Click **Network Admin** > **Avalanche**.

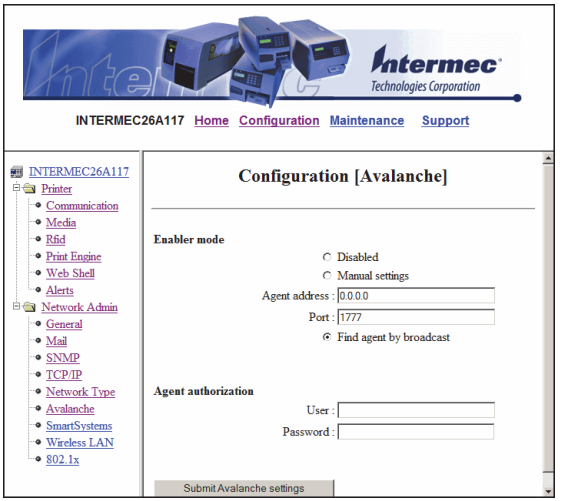

2 View or update your settings.

3 Click **Submit Avalanche settings**.

Use the following table to understand the Avalanche settings.

Understanding the Avalanche Settings

Setting	*Description*
Enabler Mode	Click one of the option buttons: • **Disabled:** Disables Avalanche. • **Manual settings:** Enables Avalanche. You need to enter the Agent address and Port in the text fields. • **Find agent by broadcast:** Enables Avalanche and the network connection broadcasts to find the agent.
Agent authorization	Enter your user name and password in the entry fields.

Configuring SmartSystems Settings

Use the SmartSystems page to view or change the SmartSystems server IP address and the master port number.

To configure the SmartSystems settings

1 Click **Network Admin** > **SmartSystems**.

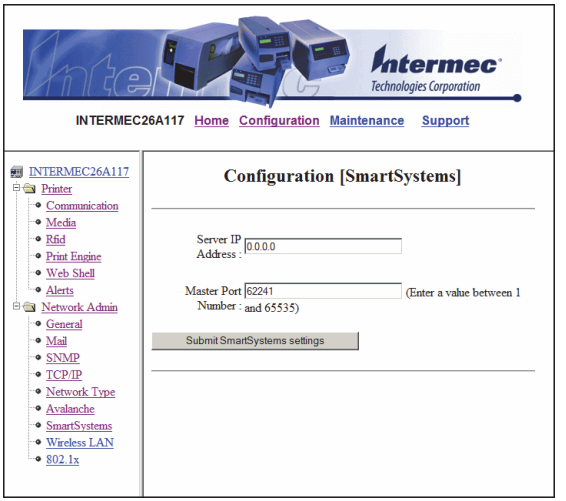

2 View or change the settings.

3 Click **Submit SmartSystems settings**.

Configuring Wireless LAN Settings

Use the Wireless LAN page to view and change 802.11 settings.

Note: The Wireless LAN settings are only available if your printer has the wireless 802.11 radio interface option installed and is running Fingerprint 8.77.0 or later, or IPL v2.77.0 or later.

To configure wireless LAN settings

1 Click **Network Admin** > **Wireless LAN**.

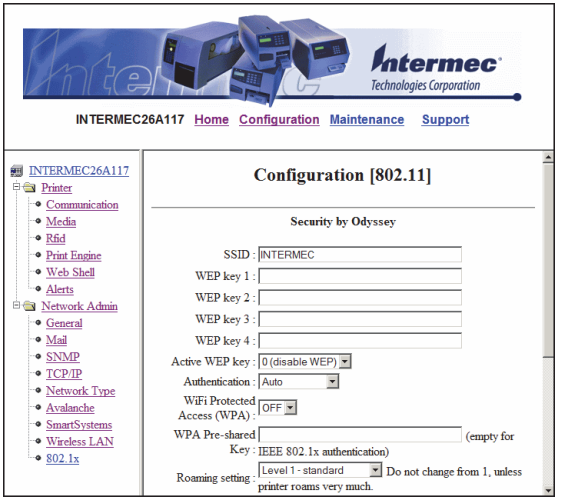

2 View or update your settings.

3 Click **Submit 802.11 settings**.

Use the following table to understand the Wireless LAN settings.

Understanding the Wireless LAN Settings

Setting	*Description*
SSID	The network name of the printer.
Mode	Set the operating mode of the device to Ad-Hoc or Infrastructure.
WEP	Set Wired Equivalent Privacy (WEP) to on or off.
WEP Keys	You can enter values for up to 4 WEP keys.
Active WEP key	Chooses the active WEP key.

Understanding the Wireless LAN Settings (continued)

Setting	Description
Authentication	Sets the type of authentication to use for your WEP keys. You can choose between Auto, Open System, and Shared.
WPA	Sets the Wi-Fi Protected Access (WPA) to either on or off.
WPA Pre-shared key	Sets the WPA Pre-shared key.
WPA2	Sets the Wi-Fi-Protected Access version 2 to either on or off.
Roaming setting	Sets the roaming reluctancy to 1, 2 or 3. Setting the roaming reluctancy to 0 turns off the roaming feature.
Current channel	(Read only or read/write for adhoc connections) Shows the current channel being used.
AP MAC Address	(Read only) MAC address of the access point to which the printer is connected.
Signal strength	(Read only) Radio signal strength of the access point.
Speed	(Read only) Speed of the current connection.
Region	(Read only) Shows the country short names provided by the 802.11d standard for the currently selected region or country.

Configuring 802.1x Settings

The 802.1x settings page is only available if you have the optional wireless interface installed in your printer. Use the 802.1x page to view and change 802.1x security settings.

To configure 802.1x settings

1 Click **Network Admin** > **802.1x**.

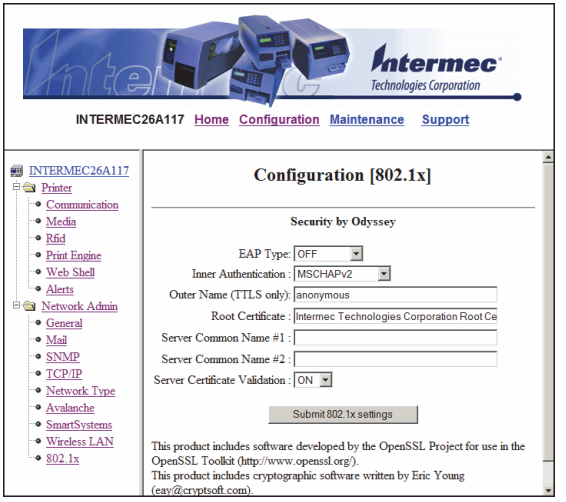

2 View or update your settings.

3 Click **Submit 802.1x settings**.

Use the following table to understand the 802.1x settings.

Understanding the 802.1x Settings

Setting	*Description*
EAP Type	Choose the Extensible Authentication Protocol (EAP) type: • TTLS • LEAP • PEAP • EAP-FAST • Off (disables 802.1x security) (default)

Understanding the 802.1x Settings (continued)

Setting	Description
Inner Authentication (TTLS, EAP-FAST, and PEAP only)	Choose the inner authentication method: • PAP (TTLS only) • MSCHAPv2 • EAP/MSCHAPv2 • EAP/MD5 • EAP/GTC
Outer Name (TTLS only)	Specify the EAP identity passed in the clear. The default is `anonymous`.
PAC- Key A-ID Info	The Protected Access Credential (PAC) setting is used to specify the PAC file used by EAP-FAST authentication. This setting is automatically filled up by the printer if ACQUIRE_PAC is enabled and current installed PAC file fails authenticating the printer to the network. You can manually import a PAC file using a pass phrase the same way you install a certificate.
Automatic Provision (PAC)	Set Automatic PAC file Provisioning to on or off.
Root Certificate	The common name of the installed root CA certificate. You can also specify a different certificate (provided that it has already been installed on the printer) by entering the path to the new certificate in this field. If a pass phrase is required, add it to the end of the path in the form of "@passphrase".
Server Common Name #1 Server Common Name #2 (TTLS and PEAP only)	Specify common names. If you specify one common name, the server certificate common name must match this name for authentication. If you specify two common names, the server certificate common name must match at least one of them. The default is "" (any common name).
Server Certificate Validation (TTLS and PEAP only)	Enables certificate validation. Specifies whether or not to check if the installed CA certificate is the root of the server certificate.

Configuring Your Printer With PrintSet

Note: You cannot communicate with the printer using PrintSet through a USB connection. To use PrintSet, you must be connected serially or through the Ethernet or 802.11 network.

PrintSet is a printer configuration tool that allows you to easily change your setup parameters. You can also use PrintSet's setup wizards to guide you through common configuration tasks.

To configure the printer with PrintSet

1. Make sure that you have a PC running Microsoft Windows 2000 or later.
2. Download PrintSet from the Downloads page of the Intermec website at **www.intermec.com**.
3. Connect your printer to your PC using a serial cable. For help, see **"Connecting the Printer to a PC Through the Serial Port" on page 56**.

Configuring Your Printer With Commands Sent From Your PC

You can change configuration parameters by sending commands directly to the printer using your terminal program (HyperTerminal) and a serial or network connection.

If your printer uses the Fingerprint language, you use the SETUP command, followed by the node, subnode, and parameters setting. This Fingerprint example sets the media setting to labels with gaps:

```
SETUP "MEDIA,MEDIA TYPE,LABEL (w GAPS)"
```

If your printer uses the IPL language, you would send this command:

```
<STX><SI>T1<ETX>
```

To see the node, subnode, and parameters for Fingerprint and IPL, see Appendix C, **"Fingerprint and IPL Setup Menus" on page 165**.

Fingerprint automatically sends feedback to HyperTerminal as you type. If you want to see what you are typing with IPL, you need to perform the following procedure.

To see IPL commands as you type

1. From the HyperTerminal menu, select **File** > **Properties** > the **Settings** tab.
2. Click the **ASCII Setup** button.
3. Select **Echo typed characters locally**.
4. Click **OK** twice.

For more information on how to change configuration settings, see either the *Intermec Fingerprint Command Reference Manual* or the *IPL Command Reference Manual*.

Configuring Your Printer Using SmartSystems Foundation

SmartSystems™ Foundation is an Intermec software platform that lets you manage all of your SmartSystems-enabled devices simultaneously from a central server. The SmartSystems Console displays all SmartSystems-enabled computers and peripherals in your network.

Through the Console, you can:

- drag-and-drop configuration bundles, OS updates, and firmware upgrades to multiple computers.
- create a "golden" device configuration to use when updating other computers.
- remotely change settings on SmartSystems-enabled computers and peripherals.

With an AutoDeploy license, SmartSystems can automatically push software, configuration settings, and other files to connected PX4i and PX6i printers. AutoDeploy can report on asset locations and battery status, making it easier to manage your mobile devices. The license also enables Scan-to-Connect, which makes connecting additional PX4i and PX6i printers to your secure wireless network as easy as reading bar codes.

You can download SmartSystems Foundation at no charge from the Intermec website. For more information on SmartSystems, go to **www.intermec.com/SmartSystems**. To purchase an AutoDeploy license, contact your local Intermec sales representative.

Configuring Your Printer Using Wavelink Avalanche

You can use the Wavelink Avalanche device management system to configure all of your wireless printers. You printer ships with the Avalanche Enabler already loaded.

Each time the Avalanche Enabler is activated (typically on a warm boot), the printer attempts to connect to the Avalanche Agent. When the printer connects to the Agent, the Agent determines whether an update is available and immediately starts the software upgrade, file transfer, or configuration update.

To use Avalanche to remotely manage the printer

1. Install the configuration updates for the printer using the Avalanche Administrative Console.
2. Schedule the printer updates or manually initiate an update using the Avalanche Administrative Console.

For more information on using Wavelink Avalanche, contact your local Intermec representative or visit the Wavelink website at **www.wavelink.com**.

Choosing an Ethernet or Wireless Network

If you have an 802.11 wireless radio option installed in your printer, you need to choose between an Ethernet network or a wireless 802.11 network.

You can choose the network type of your printer:

- directly from the screen.
- using commands sent from your PC.
- using SmartSystems Foundation. For help, see **"Configuring Your Printer Using SmartSystems Foundation" on page 99**.
- from the printer home page. For help, see **"Configuring the Network Type" on page 91**.
- using PrintSet. For help, see **"Configuring Your Printer With PrintSet" on page 98**.

Choosing the Network Type From the Printer Screen

To configure the printer from the screen, you need to enter Setup mode.

To choose the network type from the printer screen

1. Press (Setup) to enter Setup mode.
2. Navigate to **Network** > **Network Type** and press (Enter).
3. Select either **Ethernet** or **Wireless 802.11** and press (Enter).
4. Press (Setup) to exit Setup mode.
5. Reboot the printer for the change to take effect.

Choosing the Network Type Using Printer Commands

You can use a serial connection to send Fingerprint or IPL commands the printer.

To choose the network type using printer commands

1. Connect your printer to your PC using a serial cable. For help, see **"Connecting the Printer to a PC Through the Serial Port" on page 56**.
2. Start a terminal application, such as HyperTerminal.
   - If you are running Fingerprint, send this command to the printer:

     `setup "NETWORK","NETWORK TYPE","`*`n`*`"`

     where *n* is either Ethernet or Wireless 802.11.
   - If you are using IPL, send this command to the printer:

     `<STX><SI>n,,,`*`p`*`<ETX>`

     where *p* is either 0 (select Ethernet interface) or 1 (Select Wireless 802.11 interface).
3. Reboot the printer for the change to take effect.

Upgrading Firmware

The latest firmware and software is available for download from the Downloads page on the Intermec website at **www.intermec.com**. You can upgrade your printer's firmware using:

- PrintSet. You can download PrintSet from the downloads page for the printer on the Intermec website at **www.intermec.com.**
- a CompactFlash (CF) card.
- a USB storage device (maximum 2 GB).
- a serial or USB connection.
- an Ethernet or 802.11 network connection.

To download firmware updates

1. Go to the Intermec website at **www.intermec.com**.
2. Click **Support** > **Downloads**.
3. Use the **Product Category**, **Product Family**, and **Product** fields, to select the printer.
4. Click **Submit**.
5. The latest available software appears on the page.
6. Download the latest firmware version to your PC.
7. Extract the .zip file to a folder on your PC.

To upgrade using PrintSet

1. Download the latest version of PrintSet from the Intermec website at **www.intermec.com**.
2. Select **File** > **Add Printer**. The Add Printer Wizard starts.
3. Under My Printers, select your printer.
4. Go to **Printer** > **Firmware Wizard**.
5. Follow the steps to update your firmware.

To upgrade using a CF card

1. Copy the firmware upgrade file to a CF card.
2. Insert the CF card in the appropriate slot on the back of your printer.

3 Turn on your printer.

To upgrade using a USB storage device

1 Turn on your printer.

2 Verify the USB storage device is supported by your printer. Insert the USB storage device in the appropriate slot on the back of your printer. On the display screen, one of the following status messages briefly appears:

- USB memory stick connected
- USB memory stick not supported

Note: If no status message appears when you insert the USB storage device, remove and reinsert the USB storage device. To manually verify the USB storage device is supported, see **"Using a USB Mass Storage Device" on page 71**.

3 Insert the USB storage device in the appropriate slot on your PC.

4 In the root directory of the USB storage device, create a folder named "upgrade."

5 Copy the firmware binary upgrade file to the upgrade folder on the USB storage device.

Note: The printer supports 8.3 binary filenames, which means the filename can have up to eight characters and a .bin extension.

6 Insert the USB storage device in the appropriate slot on the back of your printer. The upgrade starts. On the display screen, the status message, "Time Out," appears.

7 When the upgrade is complete, the status message, "Check Integrity," appears. Remove the USB storage device. You may need to restart your printer.

To upgrade using a serial or USB connection

- Use Fingerprint or IPL commands to send the upgrade file to your printer.

  For help, see the ***Intermec Fingerprint Command Reference Manual*** or the ***IPL Command Reference Manual***.

To upgrade using an Ethernet or 802.11 network connection

1. Start your web browser application.
2. In the address field, enter the IP address of your printer.
3. Press **Enter**. Your printer's home page appears.
4. From the menu at the top of the page, click **Maintenance**. The firmware upgrade screen appears.
5. Click **Browse** and browse to the location of the firmware upgrade file.
6. Double-click the file, and then click **Upgrade**.

Downloading Fonts and Graphics

The printer supports 15 scalable Unicode TrueType and TrueDoc fonts as standard. The Unicode standard allows the use of special characters for various languages including non-Latin fonts, such as Arabic, Cyrillic, Chinese (including enhanced Simplified Chinese GB18030), Japanese, Korean, and Hebrew.

You can download additional fonts to the printer's Flash memory using:

- PrintSet. You can download PrintSet from the downloads page for the printer on the Intermec website at **www.intermec.com**.
- Fingerprint or IPL commands. For help, see the ***Intermec Fingerprint Command Reference Manual*** or the ***IPL Command Reference Manual***.
- a CompactFlash card or external 2 GB USB mass storage device.

4

Troubleshooting and Maintaining the Printer

This chapter contains possible solutions to problems you may encounter while using the printer. This chapter also contains information on booting the printer and performing routine maintenance. This chapter contains these sections:

- **Troubleshooting the Printer**
- **Adjusting the Printer**
- **Maintaining the Printer**

Troubleshooting the Printer

You may have printer operation, print quality, or printer communication problems at some time during the life of your printer. You can easily fix most of the problems you encounter. If you cannot find the answer to your problem in this section, you may need to contact Product Support.

Contacting Product Support

Before contacting Intermec Product Support, you may want to visit the Intermec technical knowledge base (Knowledge Central) at **intermec.custhelp.com** to review technical information or to request technical support. If you still need help after visiting Knowledge Central, you may need to call Product Support.

To talk to an Intermec Product Support representative in the U.S.A. or Canada, call:

1-800-755-5505

Outside the U.S.A. and Canada, go to **www.intermec.com** and click Contact to find your local Intermec representative.

Before calling Intermec Product Support, make sure you have the following information ready:

- Printer serial number
- Firmware type and version
- Ethernet, wireless, or serial port settings

You can find all of the information listed above in the printer menu system or on a test print page.

Understanding Error Messages

Use the following tables to troubleshoot common error messages you may see displayed on your printer's screen. Keep in mind that some error messages:

- are specific to the type of firmware you are running.
- have corresponding error numbers.
- cause the Intermec Ready-to-Work indicator to blink or turn off.

Fingerprint Error Messages

Message	Description	Ready-to-Work Indicator Status	Error Number
Out of paper	The printer is out of paper. Load a new roll of media. For help, see **"Loading Media" on page 7**.	Blinking	1005
Next label not found	Next label not found	Blinking	1031
Label not taken	Label not taken	Blinking	
Out of transfer ribbon	The printer is out of transfer ribbon. Load a new roll of ribbon. For helps, see **"Loading Ribbon" on page 43**.	Blinking	1027
Transfer ribbon is installed	This is not an error condition. This message briefly appears after a new roll of transfer ribbon is installed.	Blinking	1058
Head lifted	The printhead is lifted. Lower the printhead.	Blinking	1022
Cutter does not respond	Open and shut the cutter.	Blinking	1059
Cutter error1	Open and shut the cutter.	Blinking	1701
Cutter error2	Open and shut the cutter.	Blinking	1702
Cutter error3	Open and shut the cutter.	Blinking	1703
Cutter open	Shut the cutter.		1704
LSS too high	This error can occur when you run a test feed without any media installed, or if you have incorrect media settings. Load the printer with media and select the appropriate media type. For help, see **"Loading Media" on page 7**.	Blinking	1007

Fingerprint Error Messages (continued)

Message	Description	Ready-to-Work Indicator Status	Error Number
LSS too low	This error can occur when you run a test feed without any media installed, or if you have incorrect media settings. Load the printer with media and select the appropriate media type. For help, see **"Loading Media" on page 7**.	Blinking	1008
Testfeed not done	The printer did not perform a test feed before it printed out test labels. Performing a test feed calibrates the sensor. To perform a testfeed, press the ⏻ button.	Blinking	1606
No RFID support installed	The optional RFID interface is not installed in the printer.	Blinking	1320
No tag found	No RFID tag has been found.	Blinking	1321
Pause Mode Entered	The print job is paused.	Blinking	
Setup Mode Entered	The printer is in Setup mode.	Off	
IP link error	No network connection.	Blinking	
IP configuration error	The printer is trying to acquire an IP address from the network. Wait for the printer to complete the task before taking any action.	Blinking	
Generic DP error	In Direct Protocol, you can enable error handling for specific errors using the ERROR statement. When errors added to the built-in error handling occur, this event is set. The text included in the SNMP trap is the standard text corresponding to the error.	Blinking	
Press any key to continue	If an error occurs in the Fingerprint immediate mode, for example "out of paper" when the print key is pressed, this event is set.	Off	
Application load error	If an application is started but does not run, the Intermec Ready-to-Work indicator blinks. For example, if there is a syntax error in the loaded program file.	Blinking	
RtW blink by application	This condition is set by the Fingerprint SYSHEALTH command. For more information, see the ***Intermec Fingerprint Command Reference Manual***.	Blinking	

Fingerprint Error Messages (continued)

Message	Description	Ready-to-Work Indicator Status	Error Number
RtW off by application	This condition is set by the Fingerprint SYSHEALTH command. For more information, see the *Intermec Fingerprint Command Reference Manual*.	Off	
Application break	If you perform a user break by pressing Shift - Pause to stop an application from running, or if a runtime error occurs, the Intermec Ready-to-Work indicator turns off. You can turn the indicator on by changing to Direct Protocol or running an application. But, if the application handles the break (ON BREAK) or runtime error (ON ERROR GOTO), the Intermec Ready-to-Work indicator is not affected, and the application sets the status. For more information, see the *Intermec Fingerprint Command Reference Manual*.	Off	
Printhead not found	Printhead not found.	Off	
Rebooted	The printer has been rebooted.	Off	
Initializing	The printer is initializing.	Off	
Printer crash	Printer crash. In most instances, when the printer crashes, the screen is reset which causes the Intermec Ready-to-Work indicator to turn off.	Off	
Printer turned off	The printer is off.	Off	
Maintenance	Maintenance	Off	
Power supply Over temperature	The power supply is overheated and needs to cool down.	Off	1718
Printhead too hot	The printhead is overheated and needs to cool down. You need to resend your print job.	Off	1088

IPL Error Messages

Message	Description	Ready-to-Work Indicator Status	Error Number
Paper Out	The printer is out of paper. Load a new roll of media. For help, see **"Loading Media" on page 7**.	Blinking	1005
Ribbon Out	The printer is out of transfer ribbon. Load a new roll of ribbon. For helps, see **"Loading Ribbon" on page 43**.	Blinking	1031
Ribbon Fitted	This is not an error condition. This message briefly appears after a new roll of transfer ribbon is installed.	Blinking	
Printhead Up	The printhead is lifted. Lower the printhead.	Blinking	1027
Open & Shut Cutter	Cutter error 1. Open and shut the cutter.	Blinking	1058
Open & Shut Cutter	Cutter error 2. Open and shut the cutter.	Blinking	1022
Open & Shut Cutter	Cutter error 3. Open and shut the cutter.	Blinking	1059
Paper Fault	LSS too high. This error can occur when you run a test feed without any media installed, or if you have incorrect media settings. Load the printer with media and select the appropriate media type. For help, see **"Loading Media" on page 7**.	Blinking	1701
Paper Fault	LSS too low. This error can occur when you run a test feed without any media installed, or if you have incorrect media settings. Load the printer with media and select the appropriate media type. For help, see **"Loading Media" on page 7**.	Blinking	
Paper Fault	The printer did not perform a test feed before it printed out test labels. Performing a test feed calibrates the sensor. To perform a testfeed, press the ⏻ button.	Blinking	
Press Feed	Press the Feed button to resume.	Blinking	
Paused	This is not an error condition. This message appears when the print job is paused.	Blinking	
	Setup mode entered.	Off	
	IP link error. No network connection.	Blinking	

IPL Error Messages (continued)

Message	Description	Ready-to-Work Indicator Status	Error Number
	IP configuration error. The printer is trying to acquire an IP address from the network. Wait for the printer to complete the task before taking any action.	Blinking	
No Printhead	Printhead not found	Off	
	Rebooted	Off	
	Initializing	Off	
	Printer crash. In most instances, when the printer crashes, the screen is reset which causes the Intermec Ready-to-Work indicator to turn off.	Off	
	Printer turned off	Off	
	Maintenance	Off	
Psu Over Temp	Power supply over temperature	Off	
Printhead Hot	The printhead is overheated and needs to cool down. Wait for printing to resume automatically.	Off	

Troubleshooting Printer Problems and Finding Solutions

Use this section to find possible solutions to printer problems.

Print Quality Problems and Possible Solutions

Problem	Possible Solution
The printout is weak, overall.	Try these possible solutions in order: • Make sure that your media setting is appropriate for the type of media you are using. • The contrast may be too low. Try increasing the contrast. • The printhead pressure may be too low. Increase the printhead pressure. For help, see **"Adjusting the Printhead Pressure" on page 123**. • Replace the printhead. For help, see **"Replacing the Printhead" on page 130**.
The printout is weaker on one side.	Adjust the pressure arm. For help, see **"Adjusting the Pressure Arm" on page 118**.

Print Quality Problems and Possible Solutions (continued)

Problem	Possible Solution
There are weak spots on the printout.	Try these possible solutions in order: • There may be foreign particles on the media. Clean or replace the media. • Make sure that your media and ribbon are compatible. • Make sure that you are using high quality media and ribbon. • The contrast may be too low. Try increasing the contrast. • The printhead may be worn. Replace the printhead. For help, see **"Replacing the Printhead" on page 130**. • The platen roller may be worn. For help, contact your Intermec service representative.
The printout is dark, overall. Or, There is excessive bleeding on the media.	Try these possible solutions in order: • Make sure that your media setting is appropriate for the type of media you are using. • The contrast may be too high. Try decreasing the contrast. • The printhead pressure may be too high. Decrease the printhead pressure. For help, see **"Adjusting the Printhead Pressure" on page 123**. • The printhead voltage may be incorrect or the energy control may be faulty. For help, contact your Intermec service representative.
There are dark lines along the media path.	There may be foreign particles on the printhead. Clean the printhead. For help, see **"Cleaning the Printhead" on page 128**.
There are white vertical lines on the printout.	Try these possible solutions in order: • There may be foreign particles on the printhead. Clean the printhead. For help, see **"Cleaning the Printhead" on page 128**. • There may be missing dots on the printhead. Replace the printhead. For help, see **"Replacing the Printhead" on page 130**.
Part of a dotted line is missing.	Try these possible solutions in order: • The printhead may be failing. Replace the printhead. For help, see **"Replacing the Printhead" on page 130**. • The strobe signal may be failing. For help, contact your Intermec service representative.

Print Quality Problems and Possible Solutions (continued)

Problem	Possible Solution
The inner edge of the printout is missing.	Try these possible solutions in order: • The media may not be properly installed or aligned. Reload the media. For help, see **"Loading Media" on page 7**. • The small core and supply post may be in the upper position. Move the post to the lower position. • The X-start parameter may be set too low. Increase the setting.
The content on my printout is compressed.	The print speed may be too high. Lower the print speed.
Nothing shows up on my thermal transfer printout.	The ink-coated side of the ribbon may not be facing the media. Reload the ribbon. For help, see **"Loading Ribbon" on page 43**.
When I feed or print a label, the ribbon is not taken up. Instead, it spills out of the front of the printer.	Make sure Paper Type is set to Thermal Transfer Ribbon (TTR): **1** On your printer's keypad, press Setup to enter the Setup menu. **2** If you are using Fingerprint, go to **Media** > **Paper Type** > **Transfer**. If you are using IPL, go to **Media** > **Paper Type** > **TTR**. **3** Press Enter. **4** Press Setup to exit the Setup menu.
The transfer ribbon breaks.	Try these possible solutions in order: • Make sure that your media setting is appropriate for the type of media you are using. • Make sure that the ribbon is fitted correctly. Reload the ribbon. For help, see **"Loading Ribbon" on page 43**. • The energy control may be faulty. For help, contact your Intermec service representative.
The transfer ribbon wrinkles.	Try these possible solutions in order: • You may need to adjust the label stop sensor. For help, see **"Adjusting the Label Stop Sensor" on page 119**. • The printhead pressure may be too high. Decrease the printhead pressure. For help, see **"Adjusting the Printhead Pressure" on page 123**.

Print Quality Problems and Possible Solutions (continued)

Problem	Possible Solution
The media feed is not working properly.	Try these possible solutions in order: • The media characteristics may have changed. Press the ⏏ button. • One of these parameters may not be properly configured: Label rest dots, Media type, or LSS position. Verify the settings for these parameters. • The sensors may be dirty. Clean the media guides. For help, see **"Cleaning the Media Guides" on page 126**. • The sensors may need to be replaced. For help, contact your Intermec service representative.

Networking Problems and Possible Solutions

Problem	Possible Solution

I am having problems with my Ethernet or 802.11 radio network connection.	Try these possible solutions:
	• Make sure that your network cable is:
	  • securely connected to your printer.
	  • a straight "pin to pin" cable, not a "crossover" cable.
	• Make sure that your PC is correctly configured for and connected to your network.
	• Make sure that your printer is correctly configured for your network.

I cannot connect to my printer home page.	If you are connecting your printer with a crossover network cable, you may need to disable the web browser's proxy settings on your computer to access your printer's home page.

RFID Problems and Possible Solutions

Problem	Possible Solution
I loaded my printer with RFID media, but it is not writing to the tags.	After you load RFID media, restart the printer or run a TESTFEED to let the printer identify the RFID media type.

RFID Problems and Possible Solutions (continued)

Problem	Possible Solution
The RFID kit is installed, but "RFID" does not appear in the setup tree.	The printer is not communicating properly with the RFID hardware. For help, contact your local Intermec representative.
When I try to set RFID MODE to ENABLE, I get one of these error messages: • "Error in filename" (Fingerprint or Intermec Direct Protocol) • "No RFID support" (IPL)	An RFID kit is not installed in the printer. For help, contact your local Intermec representative.
None of the RFID commands work, and I get this message: "RFID Inactive."	RFID MODE is disabled. Change MODE to ENABLE.
Printing on regular media (not RFID) is slow and halted in between labels.	RFID MODE is enabled. Change MODE to DISABLE.
I am using an application to write to RFID tags, and the printer is printing "VOID" labels.	• The printer may not recognize the RFID media type. For Fingerprint printers, run a TESTFEED. For IPL printers, raise and lower the printhead, and then press Feed or turn on the printer. • You may need to modify the TAGADJUST parameter. • You may need to adjust the output power (field strength) to the antenna.
When I try to perform a TESTFEED, I get this message, "No tag found."	• Make sure that you are using RFID media. • You may need to modify the TAGADJUST parameter. • The tag may be broken. Try printing on a different label.
I get this error message: "Not supported by tag type." (Fingerprint)	This error message indicates that a command: • may be trying to access a tag data segment that is not available on the RFID media. • is being used with a level of security that is not allowed by the tag type. Make sure that you are using the appropriate media for your application.

RFID Problems and Possible Solutions (continued)

Problem	Possible Solution
When I send a TAGREAD or TAGWRITE command, I get this error message: "Tag format error."	The TAGFORMAT defined for the operation determines the number of required parameters. You may need to modify the TAGFORMAT. For help, see the ***Intermec Fingerprint Command Reference Manual*** or the ***IPL Command Reference Manual***. For more information, see the EPC Tag Data Standard (v1.1, revision 1.27) available from the EPCglobal website at **www.epcglobalinc.org.**
Data can be written unlawfully to a write protected ISO 18000-6B tag.	For some ISO 18000-6B tag chips, the functionality to protect the tag memory from being rewritten has not been implemented. Switch to tags with a different chip that have this functionality implemented.
I can read ISO 18000-6B tags, but when I try to read Class 1 tags, I get this error message: "No tag found."	Class 1 tags require an MPR6100 RFID Radio Module. To order an MPR6100 kit, contact your local Intermec representative.
(Fingerprint only) My printer displays an error code.	Use the error code text to troubleshoot the problem: 1320 No RFID support installed. 1321 No tag found. 1322 Access outside tag memory. 1323 Tag format error. 1324 RFID inactive. 1325 Not supported by tag type. 1326 RFID module too hot. 1327 RFID duty cycle exceeded. 1328 RFID lock error. Tag cannot be locked. 1329 RFID access error. Tag is locked. **Note:** If you are using Intermec Direct Protocol, error codes 1320 to 1329 are supported and displayed with the error text.

Resetting the Printer

When you reset the printer, you return it to the factory default settings. Resetting the printer removes all files used to store settings. But, it does not reset settings that have already been read when the files. So, wireless communication settings, such as SSID and keys retain their values from the previous start. However, the next reboot resets them to the factory default values.

Resetting the printer also does not change the selected printer language (Fingerprint, IPL, ZSim, or DSim).

There are two ways to reset the printer:

- Insert a special CompactFlash memory card and restart the printer.
- Use the printer's keypad.

To reset the printer using the keypad

1. Turn off the printer.
2. Open the right cover and lift the printhead.
3. Turn on the printer and press and hold the (i) key until the printer beeps.
4. Quickly press the following keys in sequence:

   (↓)(↑)(↑)(←)

   The following message appears:

   ```
   Factory Default?
   Enter=Yes ESC=No
   ```

5. Within 10 seconds, press (Enter) to reset the printer to its factory default settings. The parameters are reset and the printer continues the normal startup process.

   If you do not press (Enter) within 10 seconds, the normal startup continues and the printer is not reset.

Adjusting the Printer

You may need to adjust your printer to accommodate your printing needs or improve performance. You can adjust the:

- pressure arm.
- label stop sensor (LSS) position.
- printhead pressure.
- label taken sensor.

Adjusting the Pressure Arm

The printer is factory-adjusted for full-size media width. If you are using media that is less than full width, Intermec recommends that you adjust the position of the pressure arm so that it is centered on the media and provides even pressure.

A poorly adjusted pressure arm may be detected by a weaker printout on either side of the media path.

To adjust the pressure arm

1. Turn off the printer.
2. Open the front door and media cover.

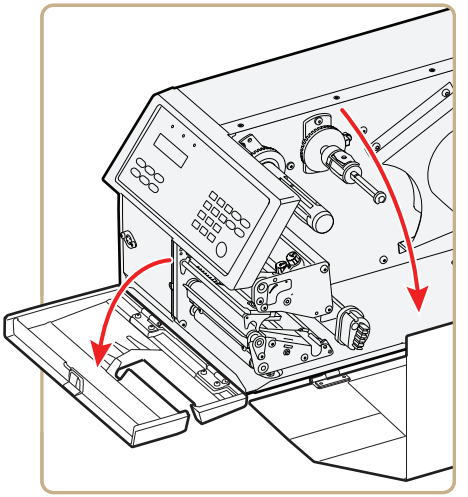

3. If necessary, remove the ribbon.

4 Loosen the knob that secures the pressure arm.

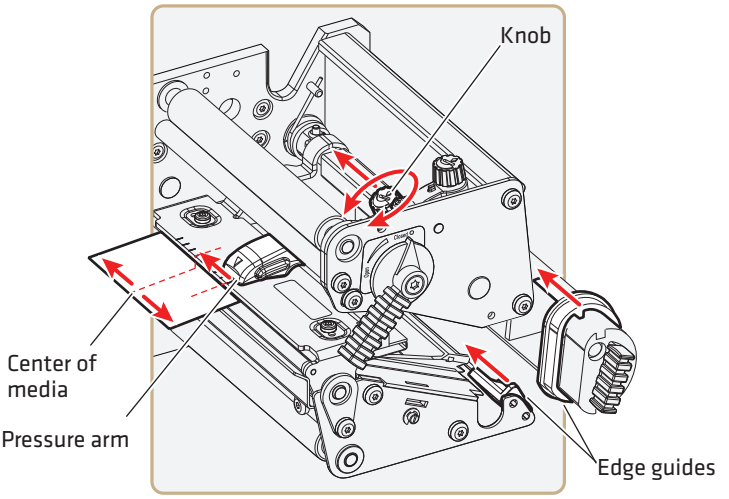

5 Move the pressure arm inward or outward until the arrow on the tip of the arm is centered with the media.

Note: Move the pressure arm at the part closest to the knob, not at the tip. If the arm is difficult to move, lift the printhead and pull the printhead bracket free from the magnet in the arm.

6 When the pressure arm is centered, tighten the knob to secure the arm.

7 Adjust the edge guides.

8 If necessary, load ribbon.

9 Close the front door and media cover.

Adjusting the Label Stop Sensor

The label stop/black mark sensor (LSS) is a photoelectric sensor that controls the printer's media feed by detecting gaps between labels, or slots or black marks in continuous stock, depending on the printer's media type setup. The LSS must be aligned with the gaps, slots, or black marks. If you are using irregularly shaped labels, align the LSS with the front tips of the labels.

The LSS can be moved laterally from the inner edge of the media path to 50 mm (1.96 in) outward, which corresponds to the center line of full width media. One part of the sensor is on the upper media guide and the other part of the sensor is under the lower guide.

To adjust the LSS

1 Use a slotted screwdriver to turn the adjustment screw.

- Rotate the screw clockwise to move the sensor toward the center section.
- Rotate the screw counterclockwise to move the sensor outward, away from the center section.

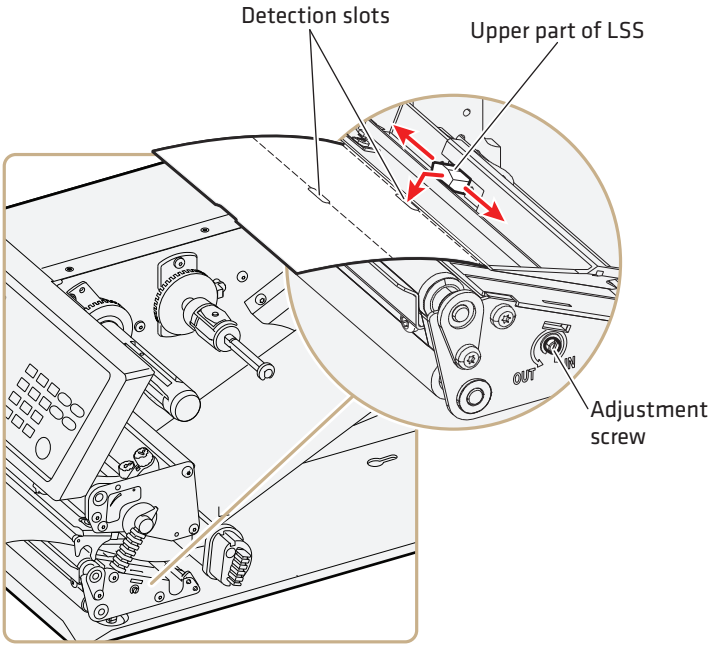

2 Look at the print mechanism from the front with the printhead lifted to make sure that the point of detection on the upper sensor is aligned with the center of the slots or marks in the media.

Note: You can also use the markings, spaced at 1 cm (0.39 in) intervals, on the lower guide plate. This method can be especially useful for black marks. Be sure to measure the lateral position of the black marks with a ruler before loading the media.

To test the LSS

1. Make sure that your printer is properly configured for the type of media you are using. Go to **SETUP** > **MEDIA** > **MEDIA TYPE**.
2. Open the media cover.
3. Lift and lower the printhead.
4. Press the ⏻ button.
5. Make sure there is a label (not a gap or mark) at the LSS.
6. Make sure that the media is routed as close to the center section as the guide allows.
7. Press Setup to enter the Setup menu, and use the keypad to go to the LSS menu:
   - If you are running Fingerprint, go to **SETUP** > **PRINT DEFS** > **LSS TEST** > **LSS AUTO**.
   - If you are running IPL, go to **SETUP** > **TEST/SERVICE** > **LSS TEST** > **LSS AUTO**.

   The screen displays the LSS AUTO menu with the cursor in the center.

   Note: There is no way to adjust the LSS function; the menus only indicate values obtained from the LSS. The test menu can determine if the sensor unit is not physically in position, is blocked by dust or stuck labels, or is defective in some way.

8. Check gap detection:
   a. Lift the printhead.
   b. Slowly pull out the media. When the LSS detects a gap or detection slot, the cursor moves to the right.

   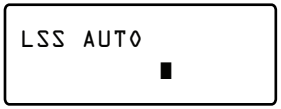

9 Check mark detection:

a Lift the printhead.

b Slowly pull out the media. When the LSS detects a black mark, the cursor moves to the left.

10 If the LSS does not move as described in Steps 8 and 9, make sure that:

- the cursor position is accurate. Refresh the cursor position by pressing the (⌄) key.
- the LSS is laterally aligned with the slots or black marks.
- both the upper and lower parts of the LSS are aligned with each other.
- the transfer ribbon is properly loaded so it does not interfere with the LSS. For help, see **"Loading Ribbon" on page 43**.
- the LSS guides are clean and free from stuck labels or other objects that may interfere with the light that goes from one part of the LSS to the other. For help, see **"Cleaning the Printer" on page 125**.
- the media does not have some kind of preprint that may disturb detection.
- there is enough difference between the black marks and the surrounding areas.
- the liner is transparent enough.
- the LSS works properly with another type of media.

Adjusting the Printhead Pressure

The pressure of the thermal printhead against the direct thermal media is factory-adjusted. But, you may need to adjust the printhead pressure to accommodate thicker or thinner media.

Note: Do not use a higher printhead pressure than necessary, because it may increase the wear of the printhead and shorten its life.

To adjust the printhead pressure

1 Turn the adjustment knob clockwise for more pressure and a darker printout (+) or counter-clockwise for less pressure (-) and a lighter printout.

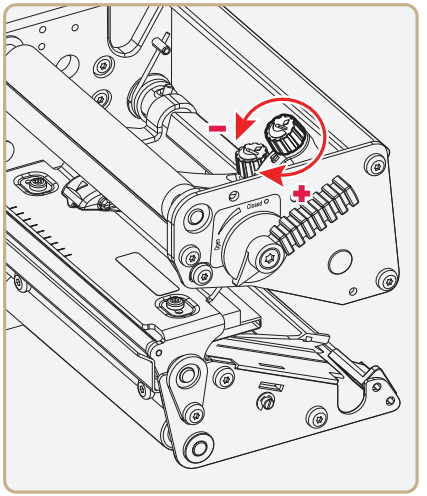

2 Print test labels to check the print quality. For help, see **"Printing a Test Label" on page 51**.

To return the printhead pressure to the factory default setting

- Tighten the knob (+) as much as you can, and then loosen it (-) four full turns.

Adjusting the Label Taken Sensor

If you are using the optional label taken sensor (LTS), you may need to adjust the sensitivity depending on ambient light conditions and the reflective characteristics of the back side of the media.

To adjust the LTS

1. Press Setup to enter the Setup menu, and use the keypad to go to the LTS menu:
   - If you are running Fingerprint, go to **SETUP** > **PRINT DEFS** > **LTS**.
   - If you are running IPL, go to **SETUP** > **TEST/SERVICE** > **LTS**.
2. Modify one or more LTS settings.

Setting	How to Modify
LTS Adjust	**1** Press Enter. The printer feeds a label. **2** Remove the label and press Enter again. The printer displays the sensitivity value that is automatically selected by the firmware and the range in which the LTS will work. **3** Press Enter again to proceed to the LTS Test menu.
LTS Test	**1** Press Enter. The printer feeds a label. **2** Remove the label. The printer automatically feeds another label. **3** Repeat Steps 1 and 2 until you are sure the LTS is working properly. **4** Press Enter to stop the test and exit.
LTS Value	**1** Press Enter. **2** Enter a new LTS value within the range indicated in the LTS Adjust menu (0 to 10).

Maintaining the Printer

To keep your printer working properly, you should perform regular maintenance.

Cleaning the Printer

To properly maintain your printer, you should regularly clean it. You can clean the:

- exterior of the printer.
- media guides.
- printhead.

To avoid possible personal injury or damage to the printer, never insert any pointed or sharp objects into the printer.

Use only the cleaning agents specified in this section. Intermec is not responsible for damage caused by any other cleaning materials used on this printer. Clean the printer with a cotton swab saturated with alcohol.

When cleaning or replacing the printhead, take precautions to avoid electrostatic discharges.

Follow these guidelines for cleaning the printer:

- Always remove the power cord before cleaning.
- Never spray the printer. Protect it from water when cleaning the premises.
- Never use any sharp tools for removing stuck labels. The printhead and rollers are delicate.

Cleaning the Exterior of the Printer

Clean the exterior of the printer as needed.

To clean the exterior of the printer

- Wipe external surfaces with a soft cloth slightly moistened with water or a mild detergent.

Cleaning the Media Guides

The label stop sensor, which controls the media feed, is covered by two plastic guides. The guides are transparent to allow the light to pass between the two parts of the label stop sensor. These areas must be kept clean from dust, stuck labels, and adhesive residue.

If your printer starts to feed labels in an unexpected way, pull out the upper guide check for objects, such as dust, adhesive residue, or labels, that may be blocking the beam of light. If necessary, clean the guides.

Warning

Isopropyl alcohol [(CH 3)2CHOH; CAS 67-63-0] is a highly flammable, moderately toxic, and mildly irritating substance.

To clean the media guides

1 Open the front door and media cover.

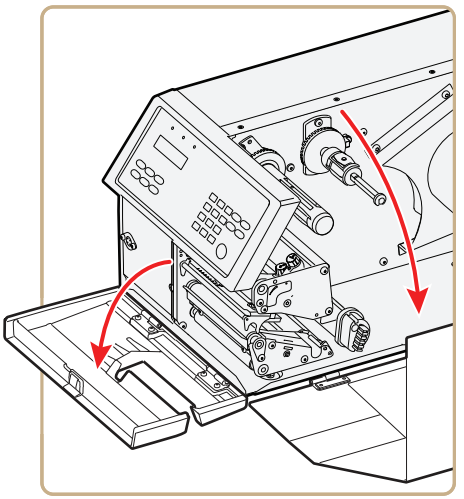

2 Pull the upper guide straight out.

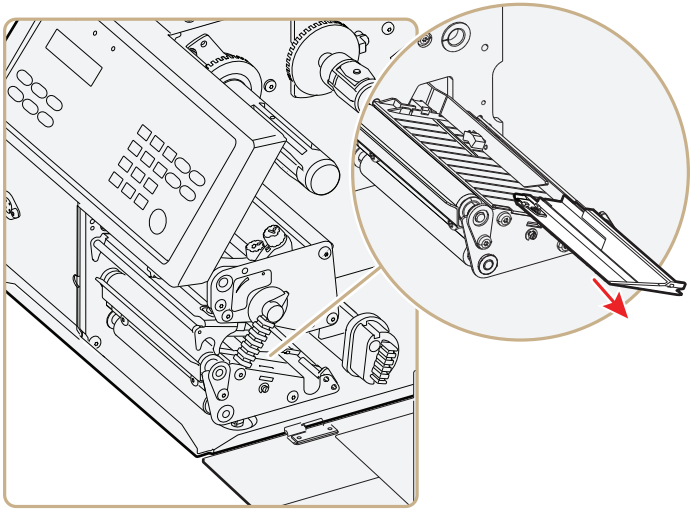

3 Press the snap-lock, lift the edge of the lower guide, and pull the lower guide straight out.

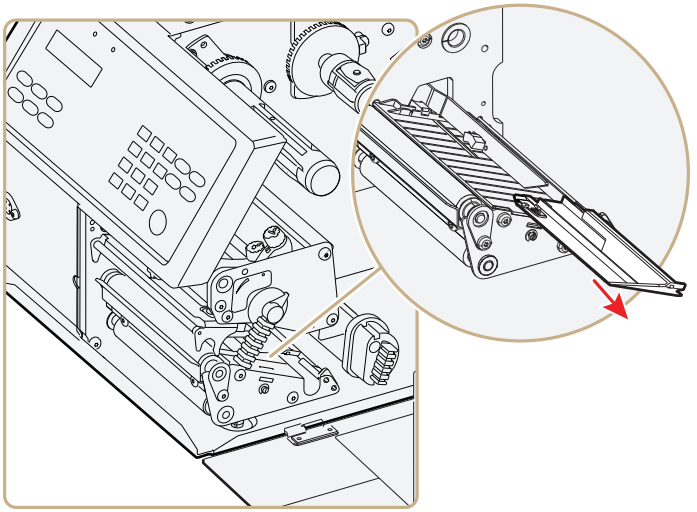

4 Clean the guides with a cleaning card or a soft cloth soaked in isopropyl alcohol. Be careful not to scratch the guides.

5 Replace the upper and lower guides.

Cleaning the Printhead

Cleaning the printhead on a regular basis is important for the life of the printhead and for the printout quality. You should clean the printhead each time you replace the media. This section describes how to clean the printhead using cleaning cards. If additional cleaning is required, for example removing adhesive residue from the platen roller or tear bar, use a cotton swab moistened with isopropyl alcohol.

Warning

Isopropyl alcohol [(CH 3)2CHOH; CAS 67-63-0] is a highly flammable, moderately toxic, and mildly irritating substance.

To clean the printhead

1. Turn off the printer.
2. Open the front door and media cover.

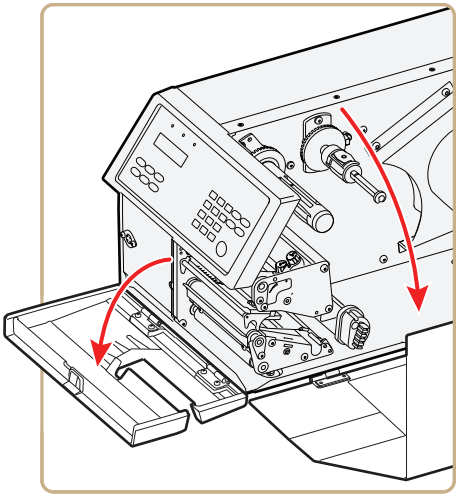

3 Turn the printhead lift lever counter-clockwise to raise the printhead.

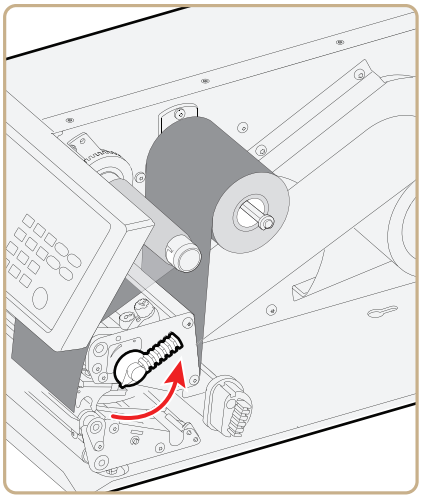

4 Remove any media and transfer ribbon.

5 Open the cleaning card envelope and pull out the cleaning card. Read the warning text.

6 Insert most of the cleaning card under the printhead, and then lower the printhead.

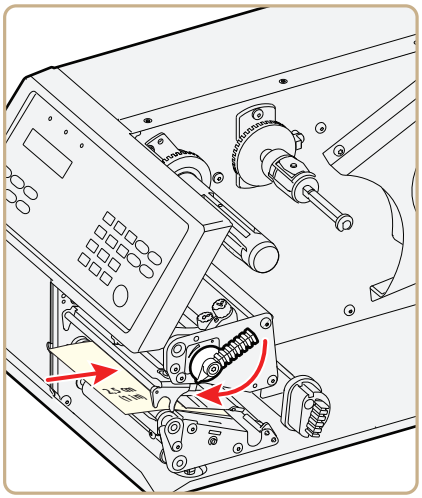

7 Pull out the cleaning card and raise the printhead.

8 Wait for approximately 30 seconds to allow the cleaning fluid to dissolve the residue.

9 Repeat Steps 5 through 7.

10 If necessary, repeat the process with a fresh cleaning card.

11 Allow the cleaned parts to dry before loading media and ribbon.

Replacing the Printhead

The printhead is subject to wear both from the direct thermal media or ribbon and from the rapid heating and cooling process during printing. So, you need to periodically replace the printhead.

How often you need to replace the printhead depends factors such as the print images, the type of direct thermal media or ribbon in use, the amount of energy to the printhead, the print speed, and the ambient temperature.

You must turn off the power before replacing the printhead. The firmware can only detect the new printhead when the printer is restarted.

To replace the printhead

1 Turn off the printer.

2 Open the front door and media cover.

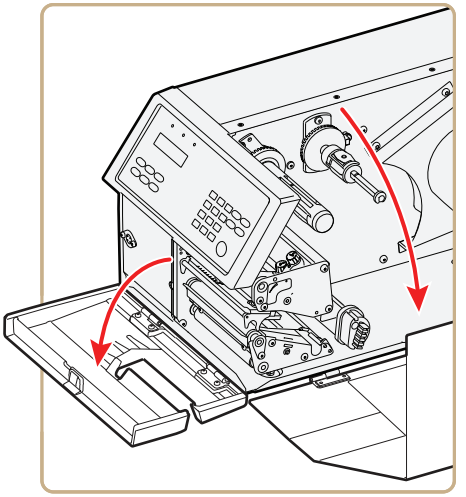

3 (PX6i only) Pull the locking handle down.

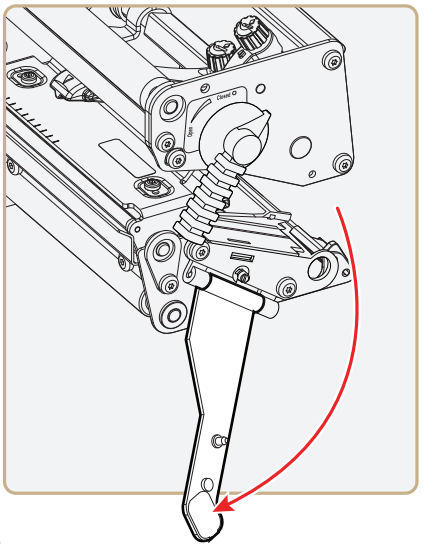

4 Turn the printhead lift lever counter-clockwise to raise the printhead.

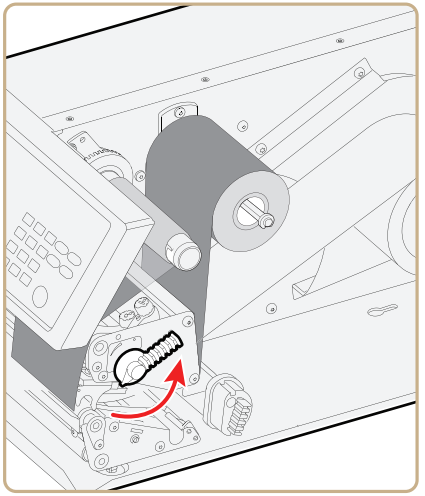

5 Remove any media and transfer ribbon.

6 Pull the printhead bracket away from the magnet in the pressure arm.

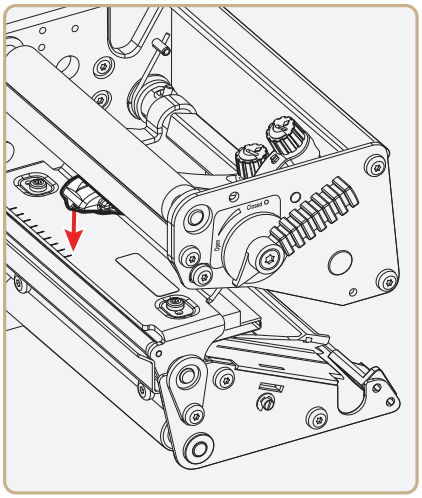

7 Disconnect the hooks of the printhead bracket from the shaft, and pull out the printhead as far as the cables allow.

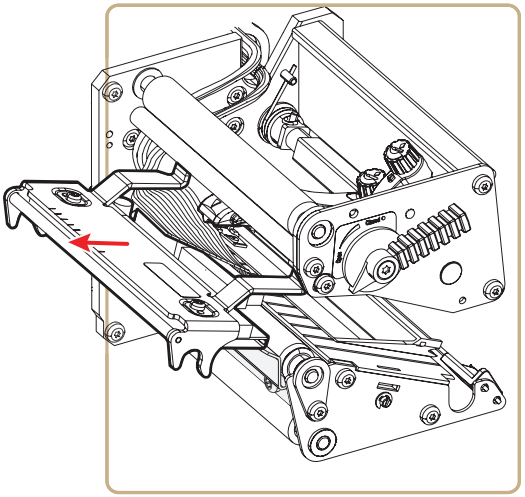

8 Disconnect the cables from the printhead. Note the snap-lock on the inner connector. Pull at the connectors, not at the cables.

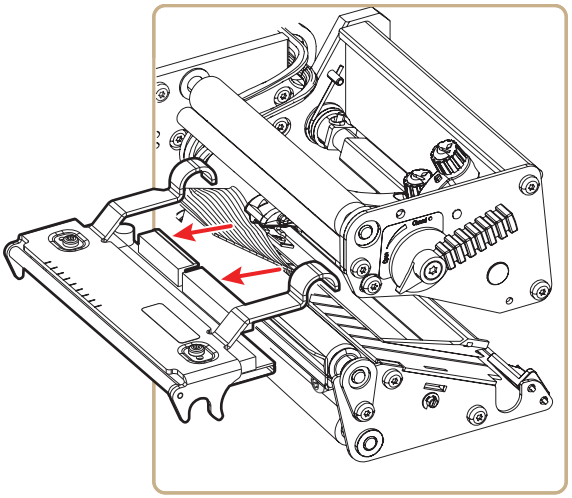

9 Connect the two cables to the replacement printhead.

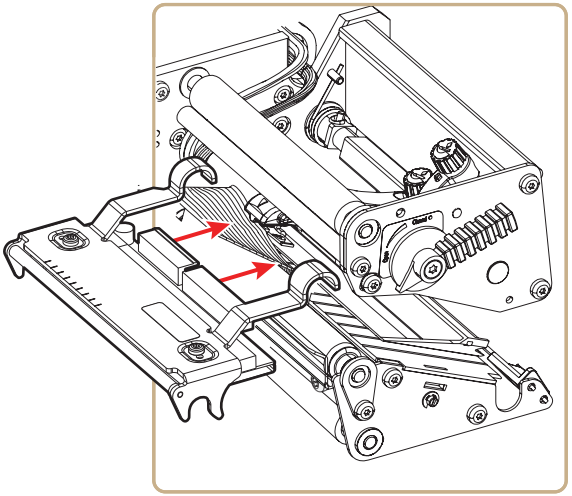

10 Connect the hooks of the printhead bracket to the headlift shaft. Make sure that the cables are not in the way.

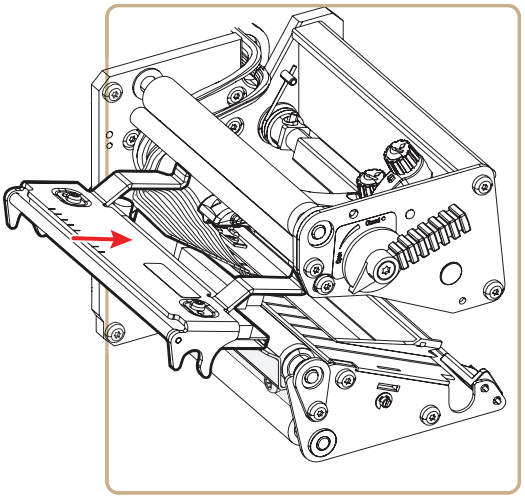

11 Turn the printhead lift lever clockwise so the magnet engages the printhead bracket.

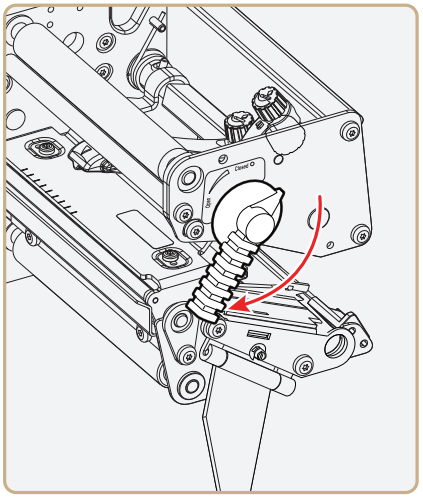

12 (PX6i only) Push the locking handle up.

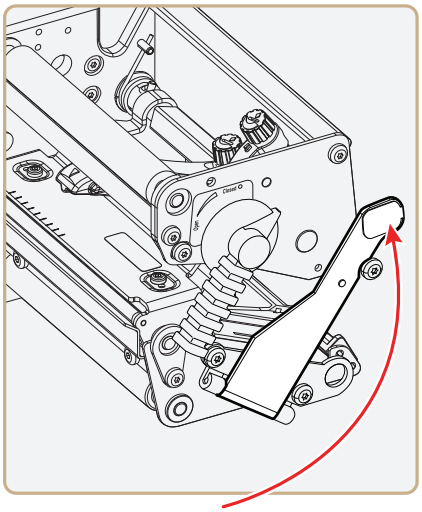

13 Load a new supply of media and ribbon. For help, see **"Loading Media" on page 7** and **"Loading Ribbon" on page 43**.

A
Specifications

This appendix contains specifications for the printer and media. It also contains information about accessories for the printer.

Specifications

Physical Specifications

PX4i Dimensions: 27.5 x 48.2 x 23.8 cm (10.8 x 19.0 x 9.4 in)

PX4i Weight: 12.85 kg (28.4 lb)

PX6i Dimensions: 33.5 x 48.2 x 23.8 cm (13.2 x 19.0 x 9.4 in)

PX6i Weight: 14.8 kg (32.6 lb)

Power Specifications

Printer Voltage: ~100-240 V, 3-1,5A, 50-60Hz

Temperature and Humidity Specifications

Operating Temperature: 5 °C to 40 °C (41 °F to 104 °F)

Storage Temperature: -20 °C to 70 °C (-4 °F to 152 °F)

Humidity: 10 to 90% non-condensing

Communications and Connectivity

- Serial port (RS-232)
- USB device
- USB full speed host
- Ethernet, 100 Mbps
- 802.11b/g (optional)
- IPv6

Memory

- 32MB RAM
- 16MB Flash
- CompactFlash (CF) card (optional)
- USB memory device (optional)

Printing Speed and Resolution

Specification	Description
Print Mode	Direct Thermal Transfer
Print Speed (variable)	100 to 300 mm/sec (4 to 12 in/sec)
Printhead Resolution	8 dots/mm (203.2 dpi) 11.81 dots/mm (300 dpi) 16 dots/mm (406 dpi) (PX4i only)
Print Width (maximum)	
PX4i Direct Transfer	112 mm (4.41 in)
PX4i Thermal Transfer	114 mm (4.5 in)
PX6i	167.4 mm (6.59 in)
Print Length (maximum)	32767 dots
Fingerprint	= 409.5 cm (161.25 in) at 203.2 dpi = 277.5 cm (109.23 in) at 300 dpi
IPL	= 409.5 cm (161.25 in) at 203 dpi
	Note: The maximum print length is also restricted by the amount of free SDRAM memory.
Media Width	
PX4i	25 to 120 mm (1 to 4.72 in)
PX6i	76.2 to 170 mm (3 to 6.69 in)
Media Roll Diameter (maximum)	213 mm (8.38 in) Tear-Off 205 mm (8.07 in Peel-Off
Media Roll Core Diameter	38 to 40 mm (1.5 in) 76 mm (3 in) with adapter fitted
Ribbon Width	
PX4i	55 to 114 mm (2.17 to 4.5 in)
PX6i	76.2 to 168 mm (3 to 6.61 in)
Ribbon Roll Outer Diameter (maximum)	80 mm (3.15 in) ± 450 m (1476 ft) of ribbon
Ribbon Roll Core Inner Diameter	25 mm (1 in)
Print Directions	4

Interfaces

This section describes the standard interfaces available on the PX4i and PX6i printers.

RS-232 Serial Interface

Use this table to understand the default settings of the serial port.

Default Settings of the Serial Port

Parameter	Default Setting
Baud rate	9600
Character Length or Data Bits	8
Parity	None
Stop Bits	1
Handshaking	none (Fingerprint XON/XOFF (IPL)

The printer end of the serial cable is a DB9 pin and the PC end is dependent on the model of the PC.

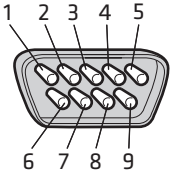

RS-232 Serial Cable DB9 Pins

Serial Cable Pins and Description

Pin	Signal	Description
1		External +5 V DC, Max 500 mA
2	TXD	Transmit data
3	RXD	Receive data
4		
5	GND	Ground
6		

Serial Cable Pins and Description (continued)

Pin	Signal	Description
7	CTS	Clear to send
8	RTS	Request to send
9		

USB Interface

The printer supports USB full speed v2.0 Host. To use the USB interface to print from a PC, you need to have the Intermec InterDriver printer driver installed on your PC. For help setting up USB communications, see **"Connecting the Printer to a PC Through the USB Device Port" on page 57**.

The printer is a "self-powered device." Intermec recommends that you only connect one printer to each USB port on the PC, either directly or through a hub. You can connect other devices, such as a keyboard or a mouse, to the same hub. If you need more than one USB printer to a host, you should use different USB ports.

The USB cable that ships with the printer has a USB Type A connector on one end to connect to the PC and a USB Type B connector on the other end to connect to the printer. You do not need to configure communications for the USB port.

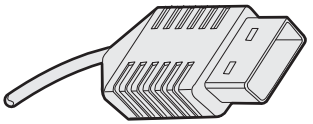

USB Type A Connector

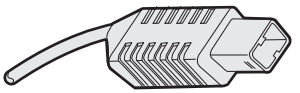

USB Type B Connector

USB Host Interface

The printer has a USB host interface for connecting USB devices such as HID bar code scanners and keyboards, USB storage devices, and USB hubs.

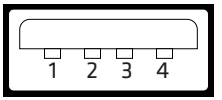

USB Host Interface

USB Host Interface Pins and Descriptions

Pin	Description
1	VBUS
2	D-
3	D+
4	Gnd

Ethernet Interface

The Ethernet interface has an RJ-45 socket for use with a standard RJ-45 cable. The interface supports 10/100 Mbps Fast Ethernet (10BASE-T, 100BASE-TX) and is fully compliant with the IEEE 802.3u standard. The network card MAC address can be found on the label below the socket.

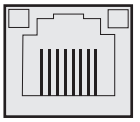

Ethernet Socket

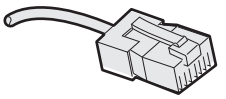

Ethernet Connector

One yellow and one green LED indicate the network status.

Understanding the Ethernet LEDs

LED	Status	Description
Green	On	Link
	Off	No link
	Blinking	Network activity
Yellow	On	100BASE-TX
	Off	10BASE-T

Parallel IEEE 1284 Interface

The parallel port supports Universal Plug and Play (UPnP) and additional status reporting through IEEE 1284 nibble ID mode.

Parallel IEEE 1284 Pins and Descriptions

Pin	Description	Transmitter	Comments
1	nStrobe	Host	
2 to 9	Data 0-7	Host	
10	nAcknowledge	Printer	
11	Busy	Printer	
12	Perror	Printer	
13	Select	Printer	
14	nAutoFd		
15 to 16	Not connected		
17	Chassis ground		
18	External +5 V DC		Max 500 mA
19 to 30	Signal ground		
31	nInit		
32	nFault	Printer	
33	Signal ground		
34 to 35	Not connected		
36	nSelectIn		

Media Specifications

Core and Roll Specifications

Measurement	Value
Core inside diameter, standard	38 to 40 mm (1.5 in)
Core inside diameter, with adapter	76.2 mm (3 in)
Core width	must not protrude outside the media
Maximum roll outside diameter	
Tear-off and cut-off	213 mm (8.38 in)
Peel-off and batch takeup	205 mm (8.07 in)
Minimum media width	
PX4i	25 mm (1.00 in)
PX6i	76 mm (3.00 in)
Maximum media width	
PX4i	114.3 mm (4.50 in)
PX6i	170 mm (6.69 in)

Non-Adhesive Strip

Media Width (a)

Printer	Measurement	Value
PX4i	Maximum	120 mm (4.72 in)
	Minimum	25.0 mm (1.00 in)
PX6i	Maximum	170 mm (6.69 in)
	Minimum	76.0 mm (3.00 in)

Media Type

Set media type to one of these values:

- Fingerprint:
  - FIX LENGTH STRIP
  - VAR LENGTH STRIP
- IPL: CONTINUOUS

Non-Adhesive Strip

Self-Adhesive Strip

External Media Width Including Liner (a)

Printer	Measurement	Value
PX4i	Maximum	120 mm (4.72 in)
	Minimum	25.0 mm (1.00 in)
PX6i	Maximum	170 mm (6.69 in)
	Minimum	76.0 mm (3.00 in)

Liner (b)

The liner must not extend more than a total of 1.6 mm (0.06 in) outside the face material and should protrude equally on both sides.

External Media Width Excluding Liner (c)

Printer	Measurement	Value
PX4i	Maximum	118.4 mm (4.66 in)
	Minimum	23.8 mm (0.94 in)
PX6i	Maximum	168.4 mm (6.63 in)
	Minimum	74.4 mm (2.93 in)

Media Type

Set media type to one of these values:

- Fingerprint:
  - FIX LENGTH STRIP
  - VAR LENGTH STRIP
- IPL: CONTINUOUS

Self-Adhesive Strip

Self-Adhesive Labels

External Media Width Including Liner (a)

Printer	Measurement	Value
PX4i	Maximum	120 mm (4.72 in)
	Minimum	25.0 mm (1.00 in)
PX6i	Maximum	170 mm (6.69 in)
	Minimum	76.0 mm (3.00 in)

Liner (b)

The backing paper must not extend more than a total of 1.6 mm (0.06 in) outside the labels and should protrude equally on both side. Recommended minimum transparency: 40% (DIN 53147).

Media Width Excluding Liner (c)

Printer	Measurement	Value
PX4i	Maximum	118.4 mm (4.66 in)
	Minimum	23.8 mm (0.94 in)
PX6i	Maximum	168.4 mm (6.63 in)
	Minimum	74.4 mm (2.93 in)

Label Length (d)

Measurement	Value
Minimum without LTS	8 mm (0.32 in)
Minimum with LTS	12 mm (0.47 in)
Maximum	6,143 mm (241 in) Depends on SDRAM size.

Note: Under ideal circumstances, a minimum label length of 4 mm (0.16 in) could be used. It requires the sum of the label length (d) and the label gap (e) to be larger than 7 mm (0.28 in), that batch printing is used, and that no pull back of the media is performed. Intermec does not guarantee that such short labels will work, but it is up to users to test this in their unique application.

Label Gap (e)

Measurement	Value
Maximum	25.0 mm (0.98 in)
Recommended	3.0 mm (0.12 in)
Minimum	1.2 mm (0.05 in)

The Label Stop Sensor (LSS) must be able to detect the extreme front edges of the labels.

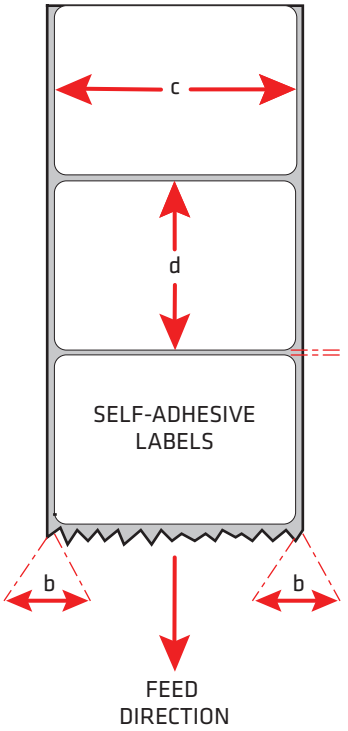

Self-Adhesive Labels

Media Type

Set media type to one of these values:

- Fingerprint: LABEL (w GAPS)
- IPL: GAP

Tickets With Gaps (Gap Stock)

Media Width (a)

Printer	Measurement	Value
PX4i	Maximum	120 mm (4.72 in)
	Minimum	25.0 mm (1.00 in)
PX6i	Maximum	170 mm (6.69 in)
	Minimum	76.0 mm (3.00 in)

Copy Length (b)

Measurement	Value
Minimum without LTS	8 mm (0.32 in)
Minimum with LTS	12 mm (0.47 in)
Maximum	6,143 mm (241 in) Depends on SDRAM size.

Note: Under ideal circumstances, a minimum ticket length of 4 mm (0.16 in) could be used. It requires the sum of the copy length (b) and the detection slit height (e) to be larger than 7 mm (0.28 in), that batch printing is used, and that no pull back of the media is performed. Intermec does not guarantee that such short tickets will work, but it is up to users to test this in their unique application.

LSS Detection Position (c)

This position is variable. For help, see **"Adjusting the Label Stop Sensor" on page 119**.

Detection Slit Length (d)

The length of the detection slit (excluding corner radii) must be a minimum of 2.5 mm (0.10 in) on either side of the LSS detection position (c).

Detection Slit Height (e)

Measurement	Value
Maximum	25.0 mm (0.98 in)
Recommended	1.6 mm (0.06 in)
Minimum	1.2 mm (0.05 in)

Media Type

Set media type to one of these values:

- Fingerprint: GAP STOCK
- IPL: GAP

Note: Do not allow a perforation to break the edge of the media, because the media may split and jam the printer.

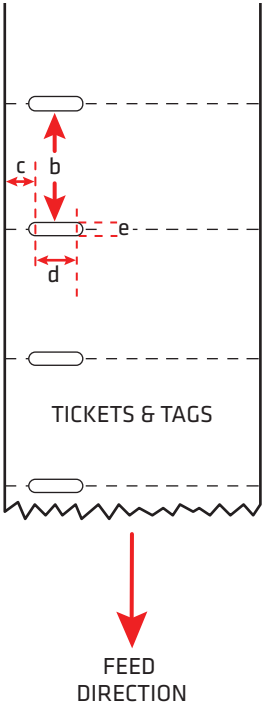

Tickets With Gaps (Gap Stock)

Tickets With Black Mark (Mark Stock)

Media Width (a)

Printer	Measurement	Value
PX4i	Maximum	120 mm (4.72 in)
	Minimum	25.0 mm (1.00 in)
PX6i	Maximum	170 mm (6.69 in)
	Minimum	76.0 mm (3.00 in)

Copy Length (b)

Measurement	Value
Minimum	20.0 mm (0.8 in)
Maximum	6,143 mm (241 in) Depends on SDRAM size.

LSS Detection Position (c)

This position is variable. For help, see **"Adjusting the Label Stop Sensor" on page 119**.

Black Mark Width (d)

Measurement	Value
Maximum	Full media width
Recommended	10.0 mm (0.39 in)
Minimum	5.0 mm (0.20 in)

Black Mark Length (e)

Measurement	Value
Maximum	25.0 mm (0.98 in)
Recommended	3.2 mm (0.13 in)
Minimum	1.27 mm (0.05 in)

Black Mark Y-Position (f)

Intermec recommends that you place the black mark as close to the front edge of the ticket as possible and use a negative Stop Adjust value to control the media feed, so the tickets can be properly torn off.

Media Type

Set media type to one of these values:

- Fingerprint: MARK STOCK
- IPL: TICKET (w MARK)

Note: The black mark should be non-reflective carbon black on a whitish background. Do not allow a perforation to break the edge of the media, because the media may split and jam the printer.

Note: Try to avoid preprint that may interfere with the detection of the black mark. However, if your are running Fingerprint, you can use the command LBLCOND to temporarily disable the sensor for a specified amount of media feed to avoid unintentional detection. For help, see the ***Intermec Fingerprint Command Reference Manual***.

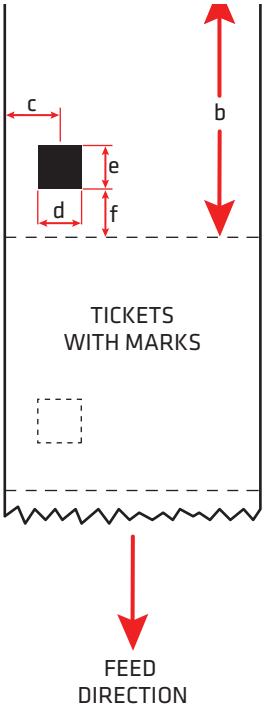

Tickets With Black Mark (Mark Stock)

Media With RFID Tags or Inlays

When printing on RFID media, special consideration must be taken to the position and shape of the tag. Specific recommendations for different kinds of Intermec-approved RFID media can be found on the Intermec website at **www.intermec.com**. Additional information is provided in the documentation that came with your RFID kit.

Accessories for the Printer

You can use these accessories (sold and ordered separately) with the printer. To order accessories, contact your local Intermec sales representative.

Liner/Batch Takeup

This factory-installed option separates labels from the liner and winds up the spent liner inside the printer's media compartment. For more information on using the liner/batch takeup, see **"Loading Media for Internal Batch Takeup Printing" on page 32**.

Paper Cutter

Use the paper cutter to cut through continuous non-adhesive paper-based media or the liner between labels.

If you are running Fingerprint or Direct Protocol, you can control the paper cutter using the commands CUT, CUT ON, and CUT OFF. For help, see the ***Intermec Fingerprint Command Reference Manual***.

Media Roll Retainer

Use the media roll retainer with a rotating media supply hub to keep large media rolls in place.

76 mm (3-in) Adapter

Use the 76 mm (3-in) adapter with a rotating media supply hub to use media rolls with 76 mm (3-in) inner diameter cores. The adapter cannot be used with a media supply roll post.

Internal Fanfold Guides

Use the internal fanfold guides to facilitate loading media from an external supply. The internal fanfold guide cannot be used in peel-off (self-strip) mode or with the label slack absorber.

Label Taken Sensor

The label taken sensor (LTS) is a photoelectric sensor that enables the printer's firmware to detect if the last printed label, ticket, tag, etc. has been removed before printing another copy. The LTS cannot be used with a paper cutter.

If you are running Fingerprint or Direct Protocol, you can enable or disable the LTS using the commands LTS& ON and LTS& OFF. For help, see the ***Intermec Fingerprint Command Reference Manual***.

Real Time Clock

The Real Time Clock (RTC) automatically keeps track of the current time. The RTC has its own backup battery backup that lasts for at least 10 years.

CompactFlash Protection Plate

The protection plate provides extra security by covering a CompactFlash card inserted in the back of the printer.

Interface Boards

A number of interface boards are available for use with the printer. The interface boards are either installed at the factory or can easily be installed by an Intermec authorized service technician.

The printer can accommodate these interface boards:

- 802.11 Radio Interface Board
- Parallel Interface Board (IEEE 1284)
- Double Serial Interface Board
- Serial/Industrial Interface Board
- RFID/Serial Interface Board

B

Default Settings

Default Configuration

The following tables list the default values of the configuration commands supported on the printer. If you restore the printer to factory default settings, the printer uses these values.

The commands are grouped by function and reflect the organization of the IPL and Fingerprint setup menus. For detailed information on most of the commands, see the ***Intermec Fingerprint Command Reference Manual*** or the ***IPL Command Reference Manual***.

Fingerprint Default Configuration

Ser-Com "uart1:" Parameters

Parameter	Default Value
Baud rate	9600
Character length	8
Parity	None
Stop bits	1
Flow control RTS/CTS ENQ/ACK XON/XOFF; data to host XON/XOFF; data from host	 Disable Disable Disable Disable
New line	CR/LF
Receive buffer	1024 bytes
Transmit butter	1024 bytes

Net-Com "net1:" Parameters

Parameter	Default Value
New line	CR/LF

COM Parameters

Parameter	Default Value
USB keyboard	US

Network Parameters

Parameter	Default Value
IP selection	DHCP+BOOTP
IP address	N/A
Netmask	N/A
Default router	N/A
IPv6 selection	Auto
IPv6 address	N/A
Nameserver	N/A
Nameserver6	N/A
DHCP response	Broadcast
MAC address	N/A
Network type	Ethernet (if no 802.11 radio is installed) Wireless 802.11 (if an 802.11 radio is installed)

RFID Parameters

Parameter	Default Value
Mode	Enable
Tagadjust	+0%
Retries	1
Voidtext	N/A
Fieldstrength	100

Feedadjust Parameters

Parameter	Default Value
Startadjust	0
Stopadjust	0

Media Parameters

Parameter	Default Value
X-start 8 dots/mm = 203.2 dpi 11.81 dots/mm = 300 dpi	 24 dots 36 dots
Width 8 dots/mm = 203.2 dpi 11.81 dots/mm = 300 dpi	 832 dots 1248 dots
Length 8 dots/mm = 203.2 dpi 11.81 dots/mm = 300 dpi	 1200 dots 1800 dots
Media type	Label (with gaps)
Paper type	Thermal transfer
Ribbon constant	90
Ribbon factor	25
Label offset	0
Ribbon sensor	14
Low diameter (ribbon)	0 dots
Label constant	85
Label factor	40
Contrast	+0%
Paper sensor	10
Low diameter (paper)	0 dots
Testfeed	N/A
Testfeed mode	Fast
Len (slow mode)	0

Print Defines Parameters

Parameter	Default Value
Head resistance	N/A
Testprint	N/A
Print speed	100 mm/sec
LSS test	N/A
Clip default	Off
Cmd language	N/A

Print Defines Parameters (continued)

Parameter	Default Value
Label taken sensor (LTS)	
LTS adjust	N/A
LTS test	N/A
LTS value	10

IPL Default Configuration

Ser-Com Parameters

Parameter	Default Value
Baud rate	9600
Data bits	8
Parity	None
Stop bits	1
Protocol	XON/XOFF

COM Parameters

Parameter	Default Value
USB keyboard	US

Network Parameters

Parameter	Default Value
IP selection	DHCP+BOOTP
IP address	N/A
Netmask	N/A
Default router	N/A
IPv6 selection	Auto
IPv6 address	N/A
Nameserver	N/A
Nameserver6	N/A

Network Parameters (continued)

Parameter	Default Value
DHCP response	Broadcast
MAC address	N/A
Network type	Ethernet (if no 802.11 radio is installed) Wireless 802.11 (if an 802.11 radio is installed)

RFID Parameters

Parameter	Default Value
Mode	Enable
Tagread	N/A
Tagadjust	+0%
Retries	1
Voidtext	N/A
Fieldstrength	100

Test/Service Parameters

Parameter	Default Value
Testprint Config Test labels Format Page UDC Font	N/A
Data dump	No
Memory reset	All
LSS test	N/A
Cmd language	N/A

Media Parameters

Parameter	Default Value
Media type	Gap
Paper type	DT (Direct Thermal)
LBL length dots	1200 dots
Testfeed mode	Fast
Sensitivity	420
Darkness	0%
LBL rest point	0
Form adj dots X	0
Form adj dots Y	0
Ribbon low	0
Paper low	0

Configuration Parameters

Parameter	Default Value
Emulation mode	None
Print speed	4 in/sec
Cutter	Not installed
LTS calibration	Not installed

C

Fingerprint and IPL Setup Menus

The setup parameters of the printer control the way the printer operates. This appendix provides an overview of the setup menu you can use to configure parameters for your printer.

Fingerprint Setup Menus

Use this section to learn about the Fingerprint setup menus and options.

Fingerprint Main Level Setup Menu

Fingerprint Ser-Com,UART1 Menu

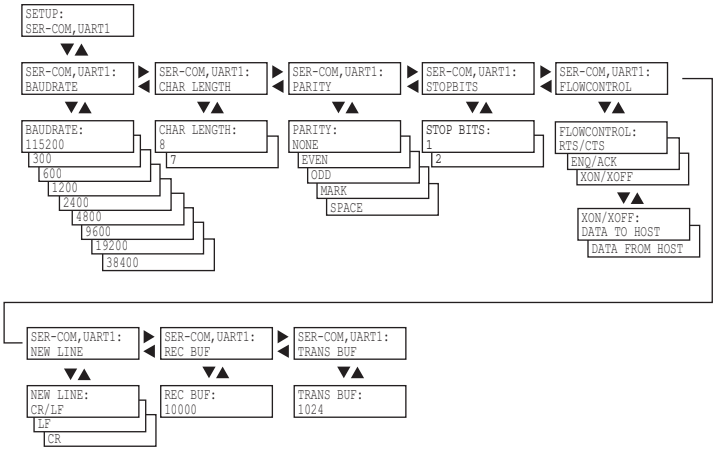

Fingerprint Net-Com,NET1 Menu

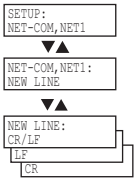

Fingerprint COM Menu

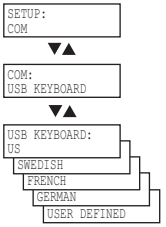

Fingerprint Network Menu

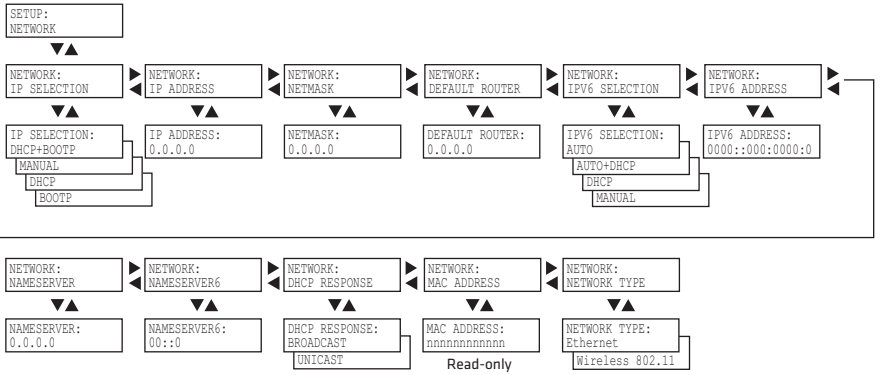

Fingerprint RFID Menu

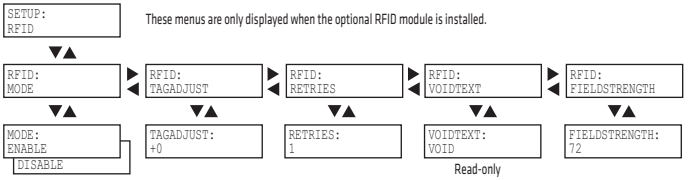

Fingerprint Feedadj Menu

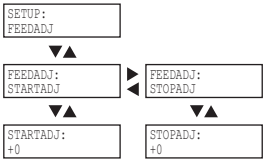

Fingerprint Media Menu

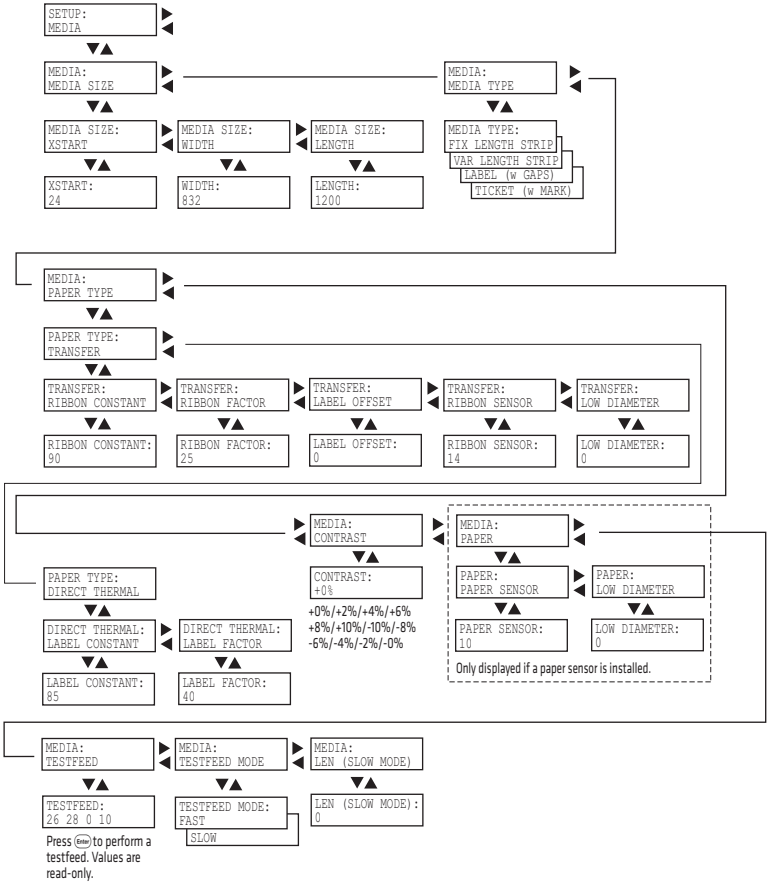

Fingerprint Print Defs Menu

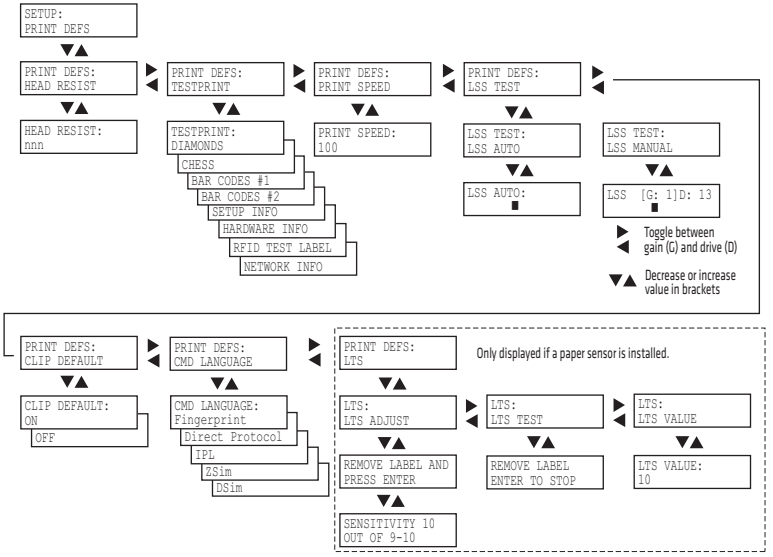

IPL Setup Menus

Use this section to learn about the IPL setup menus and options.

IPL Main Level Setup Menu

IPL Ser-Com Menu

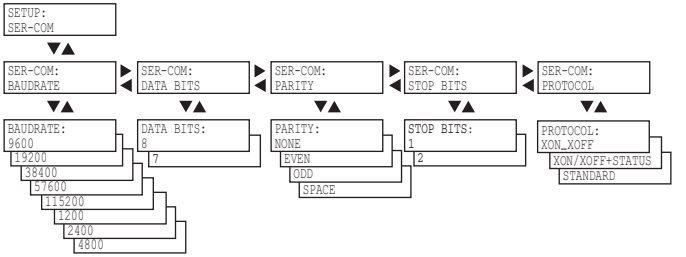

IPL COM Menu

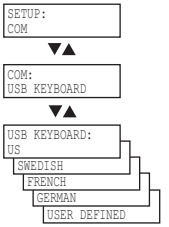

IPL Network Menu

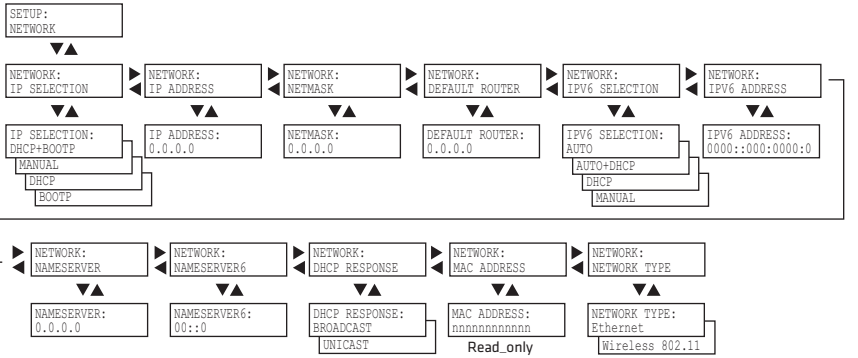

IPL RFID Menu

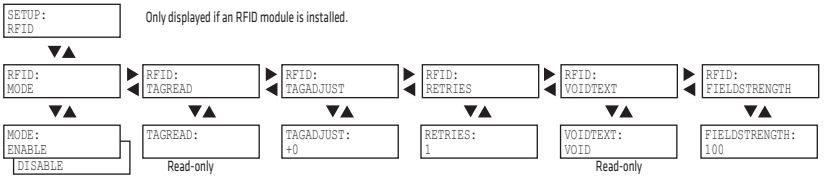

IPL Test/Service Menu

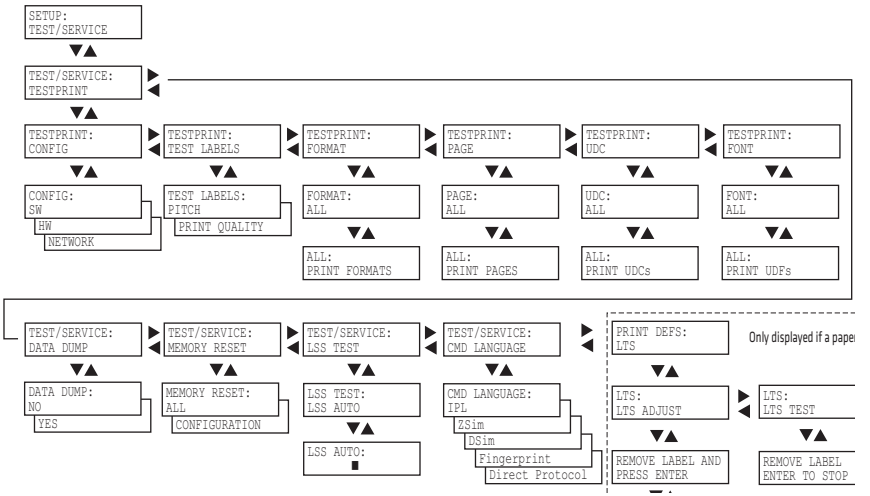

IPL Media Menu

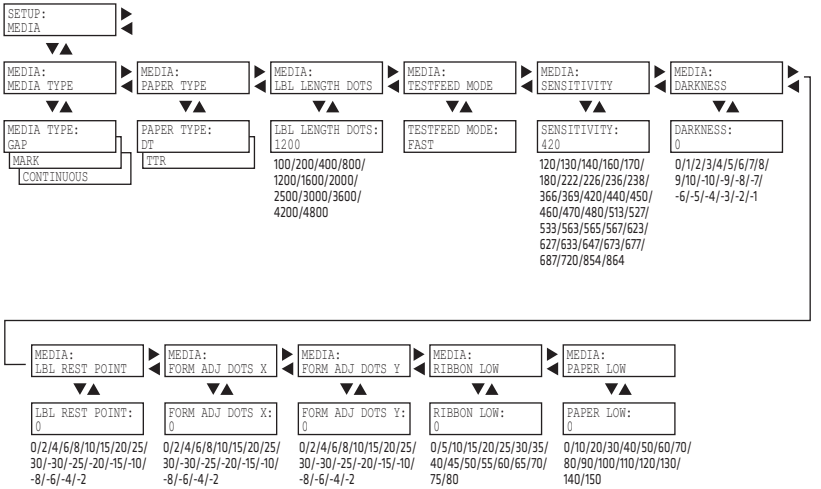

IPL Configuration Menu

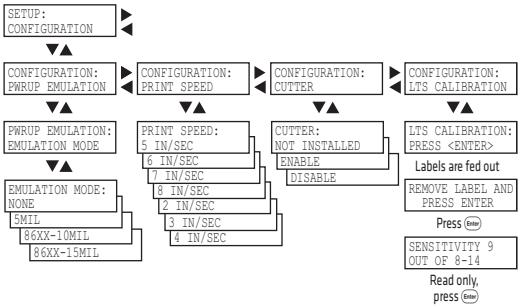

D

Advanced Configuration

This appendix contains information on the printer file system and how to modify the appearance of the printer web page.

Printer File System (Fingerprint)

As you access the printer for communications, you encounter different parts of the printer file system. The following sections contain a device tree structure and brief descriptions of the different devices and directories of the file system.

Device Tree Structure

This illustration shows the device tree structure of the printer.

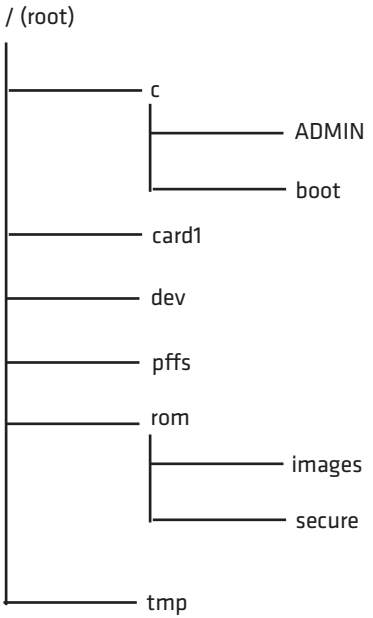

Devices and Directories

The file system of the printer is case-sensitive, which is important because filenames in Fingerprint commands are translated into capital letters by default. Directories or files with lowercase names are inaccessible for Fingerprint commands and programs.

The commands you use depend on how you navigate the printer file system:

- If you are accessing the printer through an FTP client or a web browser, you can easily navigate through the different devices and directories. Lowercase letters are not an issue for FTP or a web browser.
- If you are accessing the printer through raw TCP ("net1:"), you use Fingerprint to communicate with the printer. Because Fingerprint commands are translated into uppercase letters, you are restricted from accessing devices and directories with lowercase names. For more information on using Fingerprint, see the ***Intermec Fingerprint Command Reference Manual***.

/(root)
The root node is write protected to preserve the device and file structure of the printer.

/c (or c:)
/c is the user file system. You can create directories here to store files such as programs, fonts, and images.

/c/ADMIN (or c:ADMIN)
This directory is only accessible for the admin user. It contains start order, Fingerprint restrictions, and other configuration parameters only configurable for an administrator.

/c/boot (or c:boot)
This directory contains the firmware, password file, and other system information.

/card1 (or card1:)
This directory is the CompactFlash (CF) card file system used to store files such as large fonts and images. You can also use the CF card to upgrade printer firmware.

/dev
This directory contains devices used for input/output, such as uart1, Flash, net1, parallel IEEE 1284.

/pffs (or pffs:)
The power fail file system is used to store files that need to be saved when the printer is turned off. Files stored in this location cannot exceed 256 bytes each. The total size of the "pffs" unit is 32 KB.

/rom (or rom:)
This device is used to store a collection of files that are available by default in the printer, for example the default web pages, fonts, and images.

/rom/images (or rom:images)
This directory is used to store images used for the default web pages.

/rom/secure (or rom:secure)
This directory is used to store the password protected web pages.

/tmp (or tmp:)
This is the printer's temporary read/write memory. Files in this location are not saved when the power is turned off or if there is a power failure. Do not store valuable data in this location. You may want to use "tmp:" instead of "/c" to temporarily store data, because data can be written to SDRAM faster than to the flash memory.

Customizing the Printer Home Page

The easiest way to modify the appearance of the printer web page is to create an HTML file called "INDEX.HTM" on the device "/c" with custom designed logo and colors. From this file you can easily link to the printer configuration pages. The web server generates these web pages with dynamic information on the fly. This process makes the real-time generated pages of the printer appear in the Intermec style. The colors and logo of the customer are ignored.

Web Style Guide Files

The printer network cards customizes the default web pages by changing the configuration of the engine that generates the pages. While generating the pages, the web server accesses configuration parameters, like the background color, the name of logos to display on the page and generates the HTML code. Default configuration of these parameters makes the printer's web page appear in the Intermec style, with corporate colors and logos. When changing the parameters, the web pages are permanently customized.

Customization of these parameters has to be done in specific files called *"Web Style Guide Files"*, assigning user-defined values to several support environment variables.

Web style guide files contain parameters to set web page content and layout. These files can be stored either on /c or pffs:.

In the file system, /c has priority over pffs:, which implies that if there is a web style guide on /c (for example /c/webstyleguide.0), the printer will not look for pffs:webstyleguide.1. Intermec recommends that you store web style guides on pffs to minimize the risk of them being accidentally removed.

Content of a Web Style Guide File

A Web Style Guide file has to contain a set of mandatory environment variables and it can also contain optional variables. All variables have to be lowercase, followed by a "=" sign and a consistent value. There is no specific order of the variables.

Required Environment Variables

Use the reference table below to understand all of the required environment variables.

Understanding Required Environment Variables

Variable	Description
bgco	Background color, BGCOLOR attribute of BODY tag.
coli	Copyright link, link to html file showing Copyright notes.
cona	Company name.

Understanding Required Environment Variables (continued)

Variable	Description
loat	Logotype attributes, contains all attributes for the IMG-tag to replace the Intermec logo.
trna	Trade name.

Optional Environment Variables

The optional environment variables are used to specify extra parameters; for instance, these variables permit to change the printer's model name. The web server only recognizes the following model names:

- PF2i
- PF4i
- PM4i
- PX4i
- PX6i

The web server checks the available hardware and then displays the correct model name in the web page. If the page has to show a different name of the printer, the web style guide file has to contain the optional variable printer=your name.

Optional Variables Reference Table

Variable	Description	Comments
alco	Active link color, ALINK attribute of BODY tag.	
BGLI	Background image link, BACKGROUND attribute of BODY tag.	
heon	Help on, enables a help link on the page.	If this parameter is in the webstyle guide file, the variables "heli" and "hena" must have a value.
heli	Help link, link associated to the Help tag.	
hena	Help link name, the label to be shown on the web page.	

Optional Variables Reference Table (continued)

Variable	Description	Comments
lico	Link color, LINK attribute of BODY tag.	
suon	Support link on, enables a support link on the page.	If this parameter is in the webstyle guide file, then the variables “suli” and “suna” must have a value.
suli	Support link, this is the link associated withe the support tag.	
suna	Support link name, this is the label to be shown on the web page.	
teco	Text color, TEXT attribute of the BODY tag.	
vlco	Visited link color.	

x-www-url-Encoding Syntax Rules

The value given to environment variables has to be specified respecting the x-www-url-encoding syntax rules. According to the syntax rules, characters can be inserted using the notation %<ASCII Hex>. For example, space in the ASCII table has the Hex number 20 so it corresponds to %20. For example, “Intermec Technologies Corporation” corresponds to “Intermec%20Technologies%20Corporation” (it can also be written “Intermec+Technologies+Corporation”).

Colors are specified according to the RGB syntax: %23cdcdcd corresponds to #cdcdcd.

Any quotation marks (%22) must be preceded by a back slash (\).

The file must contain only one line, where the different variables and valuers are separated by ampersand (&) characters.

Memory and Storage

Web Style Guide files are designed to be placed on the printer's pffs, as mentioned. Due to the memory limits of the pffs the environment variables have very short name (4 bytes), which may make them less user friendly to use, but this allows more space to be used for the value of the variable.

There is also a size limit per file that is set to 256 bytes. In case the Web Style Guide File you want to create is bigger than 256 bytes, the content has to be split in more than one file.

The parser daemon will start looking for the first Web Style Guide File which has to be named "webstyleguide.0", then it will try to read the next file called "webstyleguide.1" and so on.

Creating a Web Style Guide File

You can create Web Style Guide Files with a standard text editor and then transfer them to the printer. Follow these rules when creating a Web Style Guide File:

- The name has to be lowercase.
- The first file has to have extension ".0". The following files have to have sequential extension number if one number is missing in the sequence the parser will stop reading the files.
- The split point between one web style guide and the other cannot be in the middle of a line. The last line of the file has to be consistent in the syntax and the first line of the following web style guide file has to be a new line.
- If variables are specified more than one time, the last value is the one assumed.

Intermec recommends that you use the FTP server to transfer the files.

Example (the default Web Style Guide):

```
bgco=%23ffffff&loat=src%3d\%22/rom/images/
itclogo1.gif\%22+align%3dbottom+alt%3d\%22Intermec_
Technologies_Corporation\ %22+border%3d0
&cona=Intermec+Technologies+Corporation&coli=copyrigh
t.htmf&suli=support.htmf&suna=Support&suon=t&trna=Eas
yCoder
```

Index

Numerics

76 mm (3-in) adapter, accessory 155
802.11
  choosing as network type 91, 100
  radio
    communications, setting up 61
    connection, troubleshooting 114
  security, setting from web page 94
802.1x
  configuring from web page 96
  settings, described 96

A

accessories, described 155
adjusting
  LSS position 119
  LTS 124
  pressure arm 118
  printhead pressure 123
advanced configuration 173
alerts
  configuring from web page 81
  settings, described 82
application break, error message 109
application load error, error message 108
audio feedback, described 7
authentication modes, supported 61
Automatic Provision (PAC), turning on or off 97
Avalanche
  configuring from web page 92
  settings, described 92
  using to configure the printer 100

B

back view of printer 3
bar code scanner, connecting to printer 72
batch takeup
  label taken sensor accessory 155
  loading media 15, 25, 32
beeps, described 7
blank printout, troubleshooting 113
bleeding, troubleshooting 112
blue light. See LEDs.
buttons, described 5

C

calibrating the sensor 110
CF card
  protection plate, accessory 156
  using to download fonts and graphics 104
  using to upgrade firmware 102
changing command language 4
Class 1 tag, troubleshooting 116
cleaning
  exterior 126
  media guides 126
  printhead 128
COM menu
  Fingerprint 167, 168
  IPL 170
command language
  changing from the Setup menu 4
  changing from web page 80
  selecting at startup 3
communications
  page 77
  ports and options 138
  setting up 802.11 radio 61
  setting up Ethernet 58, 59
  settings, configuring 77
compressed printout, troubleshooting 113
configuration
  advanced 173
  menu, IPL 172
  settings, changing 74–99
contacting Product Support 106
control panel, described 5
core and roll, media specifications 144
creating labels 53
cut-off printing, loading media 24
cutter, error message 107, 110

D

default configuration
  Fingerprint 158
  IPL 161
  serial port settings 56

default configuration (*continued*)
settings 158–163
viewing and changing with web page 80
device tree structure 174
DHCP, default setting 58, 59
directories, printer 174
downloading
firmware 102
fonts and graphics 104
DSim, command language
changing 4
described 4

E

EAP Type, choosing 802.1x with web page 96
environmental specifications 138
error
messages, understanding 107
numbers 107–110
error in filename, error message 115
Ethernet
choosing as network type 100
choosing network type 91
connection, troubleshooting 114
interface description 142
LEDs, understanding 143
setting up communications 58, 59
exterior, cleaning 126
external supply, loading media 41

F

factory default
resetting the printer 117
settings 158–163
fanfold guides
accessory 155
installing 41
Feed button, described 5
Feedadj menu, Fingerprint 167, 168
file system, Fingerprint printer 174
Fingerprint
COM menu 167, 168
command language
changing 4
described 3
configuring wireless security 64
default configuration 158
Feedadj menu 167, 168
Net-Com, NET1 menu 166
Network menu 167, 168
Print Defs menu 169
RFID menu 167, 168
Ser-Com, UART1 menu 166
Setup menu illustration 75
sounds, described 7
using commands to upgrade firmware 103
using to configure network type 101
using to configure the printer 98
using to download fonts and graphics 104
using to serially configure IP settings 60
firmware
upgrading
using PrintSet 102
with CF card or USB mass storage device 102
with printer commands 103
with web page 104
fonts, downloading 104
front view of printer 2

G

General network web page
configuring settings 83
understanding settings 83
generic DP error, error message 108
graphics, downloading 104
green light. See LEDs.

H

head lifted, error message 107
home page
customizing printer 176
illustration 59
printer login and password 59
humidity specifications 138
HyperTerminal
sending configuration commands 98
setting up wireless communications 63
turning on typing with IPL 99

I

i button, described 6
IEEE 1284
  interface, pins and descriptions 143
  port, using to connect printer to PC 57
incomplete printout, troubleshooting 113
Information button, described 6
initial startup screen 4
inner authentication, choosing 802.1x with web page 96
InterDriver software, how to download 57
interface
  Ethernet 142
  IEEE 1284 143
  serial 140
  standard 140
  USB 141
  USB host 142
interface board, accessory 156
Intermec Ready-to-Work Indicator
  blinking 107, 108, 110, 111
  described 6
  off 108–111
internal batch takeup printing, loading media 32
IP address
  configuring manually 60
  retrieving with DHCP 59
IP configuration error, error message 108, 111
IP link error, error message 108
IP settings, configuring serially 60
IPL
  COM menu 170
  command language
    changing 4
    described 3
  Configuration menu 172
  configuring wireless security 67
  default configuration 161
  Media menu 172
  Network menu 171
  RFID menu 171
  Ser-Com menu 170
  Setup menu illustration 75
  sounds, described 7
  Test/Service menu 171
  using commands to upgrade firmware 103
  using to configure network type 101
  using to configure the printer 98
  using to download fonts and graphics 104
  using to serially configure IP settings 60
IPV4 settings, web page, described 89
IPV6 settings, web page, described 89
ISO 18000-6B tag, write protected 116

K

keyboard
  changing layout 72
  configuring layout from web page 77
  connecting to the printer 71
Knowledge Central, web site 106

L

label
  creating and printing 53
  printing test 51
label not taken, error message 107
label taken sensor, accessory 155
LEDs, described 6
line
  dark, troubleshooting 112
  missing, troubleshooting 112
  white, troubleshooting 112
liner/batch takeup, accessory 155
loading media
  batch takeup 15, 25, 32
  cut-off printing 24
  described 7
  from an external supply 41
  LTS 15, 25
  peel-off printing 15
  self-strip printing 15
  tear-off printing 8
loading ribbon 43
login name, home page 59
LSS position, adjusting 119
LSS too high, error message 107
LSS too low, error message 108
LSS, testing 121

LTS
adjusting 124
loading media 15, 25
settings, described 124

M

mail settings, configuring from web page 85
maintaining the printer 125
maintenance, error message 109
media
feed direction, configuring 79
loading 7
menu
Fingerprint 168
IPL 172
not feeding, troubleshooting 114
RFID, printing on 54
roll diameter, max and min 139
settings, configuring 77
specifications 144
core and roll 144
non-adhesive strip 144
self-adhesive labels 147
self-adhesive strip 146
tickets with black mark 152
tickets with gaps 150
thicker or thinner, adjusting for 123
web page 77
width, max and min 139
media guides, cleaning 126
media roll retainer, accessory 155
memory and storage, web style guide 180
memory, printer 138
missing part of printout, troubleshooting 113
missing printout, troubleshooting 113

N

navigating in Setup mode 74
Net-Com, NET1 menu, Fingerprint 166
Network menu
Fingerprint 167, 168
IPL 171
network type
choosing Ethernet or wireless 802.11 100
choosing from the screen 101
choosing with printer commands 101
configuring from web page 91
network, connecting your printer 58
next label not found, error message 107
no printhead, error message 111
no RFID support installed, error message 108
no RFID support, error message 115
no tag found, error message 108, 115, 116
non-adhesive strip, media specifications 144
not supported by tag type, error message 115

O

optional environment variables, web style guide 178
out of paper, error message 107
out of transfer ribbon, error message 107

P

paper cutter
accessory 155
loading media 25
paper fault, error message 110
paper out, error message 110
parallel port
pins and descriptions 143
using to connect printer to PC 57
password
changing with web page 83
home page 59
pause button, described 5
peel-off printing, loading media 15
performing a testprint 51
physical specifications 138
power LED, described 6
power specifications 138
power supply over temperature, error message 109, 111
press feed, error message 110
pressure arm, adjusting 118
print button, described 5
Print Defs menu, Fingerprint 169

print engine settings, configuring 79
print speed, configuring 79
print width, max and min 139
printer
  adjusting 118
    LSS 119
    LTS 124
    pressure arm 118
    printhead pressure 123
  back view 3
  choosing network type from the screen 101
  configuring 74–99
    from screen 74
    from the home page 76
    using commands 98
    using PrintSet 98
    using SmartSystems Foundation 99
    using Wavelink Avalanche 100
  connecting to a PC 56–58
    through the IEEE 1284 port 57
    through the serial port 56
    through the USB device port 57
  connecting to your network 58
  directories, Fingerprint file system 174
  file system, Fingerprint 174
  front view 2
  home page
    illustration 59
    login name and password 59
    problems connecting to, troubleshooting 114
    using to configure printer 76
  identifying parts 2
  initial startup screen 4
  learning about 2
  maintaining 125
  memory 138
  modifying web page 173
  name, viewing 83
  resetting 117
  slow, troubleshooting 115
  sounds, described 7
  specifications 138
  standard interfaces 140
  troubleshooting 106
printer crash, error message 109
printhead
  cleaning 128
  pressure, adjusting 123
  replacing 130
  up, error message 110
printhead hot, error message 111
printhead not found, error message 109, 111
printhead too hot, error message 109
printing
  a test label 51
  labels, how to 53
  on RFID media 54
printout
  blank, troubleshooting 113
  compressed, troubleshooting 113
  dark, troubleshooting 112
  incomplete, troubleshooting 113
  lines, troubleshooting 112
  partly missing, troubleshooting 113
  spots, troubleshooting 112
  weak, troubleshooting 111
PrintSet
  using to configure the printer 98
  using to download fonts and graphics 104
  using to set up wireless communications 62
  using to upgrade firmware 102
Product Support, contacting 106
PSU over temperature, error message 111

R

real time clock, accessory 156
red light. See LEDs.
replacing, printhead 130
required environment variables, web style guide 177
resetting the printer 117
RFID
  error codes, troubleshooting 116
  media, printing on 54

RFID (*continued*)
menu
Fingerprint 167, 168
IPL 171
settings, configuring 78
troubleshooting 114–116
web page 78
RFID inactive, error message 115
ribbon
breaks, troubleshooting 113
loading 44
loading thermal transfer 43
not winding, troubleshooting 113
roll diameter, max and min 139
width, max and min 139
wrinkles, troubleshooting 113
ribbon out, error message 110
RS-232 serial interface 140
RtW blink by application, error message 108
RtW off by application, error message 109

S

scanner, connecting to printer 72
screen
choosing network type 101
described 7
initial startup 4
using to configure the printer 74
security, configuring wireless 94
selecting a command language 3
self-adhesive labels, media specifications 147
self-adhesive strip, media specifications 146
self-strip printing, loading media 15
sensor, calibrating 110
Ser-Com, UART1 menu, Fingerprint 166
serial communications, configuring from web page 77
serial interface
default settings 140
illustration and pin descriptions 140
serial port
default communication settings 56
using to connect printer to PC 56
Setup button, described 5
Setup menu
changing command language 4
Fingerprint illustration 75
IPL illustration 75
setup menus
Fingerprint 166
IPL 170
Setup mode
entering 74
navigating 74
Shift button, described 5
slow printing, troubleshooting 115
SmartSystems
configuring with web page 93
Foundation, using to configure the printer 99
SNMP
configuring with web page 87
setting descriptions 88
sounds, described 7
specifications
humidity 138
media 144
physical 138
physical and environmental 138
power 138
printer 138
temperature 138
SSID 94
status LED, described 6
style guide
content of web 177
creating web 180
memory and storage 180
optional environment variables 178
required environment variables 177
URL encoding syntax rules 179
web pages 177

T

tag format error, error message 116
TCP/IP
configuring with web page 89
setting described 89

tear-off printing, loading media 8
temperature specifications 138
test labels
  printing from Setup menu 51
  printing from web page 80
Test/Service menu, IPL 171
testfeed not done, error message 108
testfeed, described 6
thermal transfer ribbon, loading 43
thumb drive. See USB mass storage drive
tickets with black mark, media specifications 152
tickets with gaps, media specifications 150
troubleshooting
  printer 106
  resetting the printer 117

U

URL encoding syntax rules, web style guide 179
USB
  host interface, pins and descriptions 142
  hub, connecting to printer 72
  interface description 141
USB device port, using to connect printer to PC 57
USB host port
  connecting a USB hub 72
  connecting bar code scanner 72
  connecting keyboard 71
  connecting peripherals 70
USB mass storage device
  using to download fonts and graphics 104
  using to upgrade firmware 102
  using with printer 71

V

views, printer 3

W

Wavelink Avalanche
  configuring from web page 92
  using to configure the printer 100
weak printout
  preventing 118
  troubleshooting 111
web page
  creating a web style guide 180
  customizing the home page 176
  modifying printer 173
  style guide content 177
  style guide files 177
  using to configure printer 76
  using to upgrade firmware 104
Web Shell settings
  configuring 80
  described 80
web style guide files 177
WEP
  configuring with Fingerprint 64
  configuring with IPL 67
  keys 94
  setting and description 94
wireless LAN, configuring from web page 94
wireless security
  configuring from web page 94
  configuring with Fingerprint 64
  configuring with IPL 67
WPA 95
  configuring with Fingerprint 65
  configuring with IPL 68
WPA2
  configuring with Fingerprint 65
  configuring with IPL 68
WPA2-PSK
  configuring with Fingerprint 64
  configuring with IPL 68
WPA-PSK 95
  configuring with Fingerprint 64
  configuring with IPL 68
write protected ISO 18000-6B tag 116

Z

ZSim, command language
  changing 4
  described 3

Intermec

Worldwide Headquarters
6001 36th Avenue West
Everett, Washington 98203
U.S.A.

tel 425.348.2600

fax 425.355.9551

www.intermec.com

© 2014 Intermec Technologies Corporation. All rights reserved.

PX4i and PX6i High Performance Printer User's Manual

P/N 935-024-003